P100S AC Servo Manual

交流伺服使用手册

AC Servo Manual

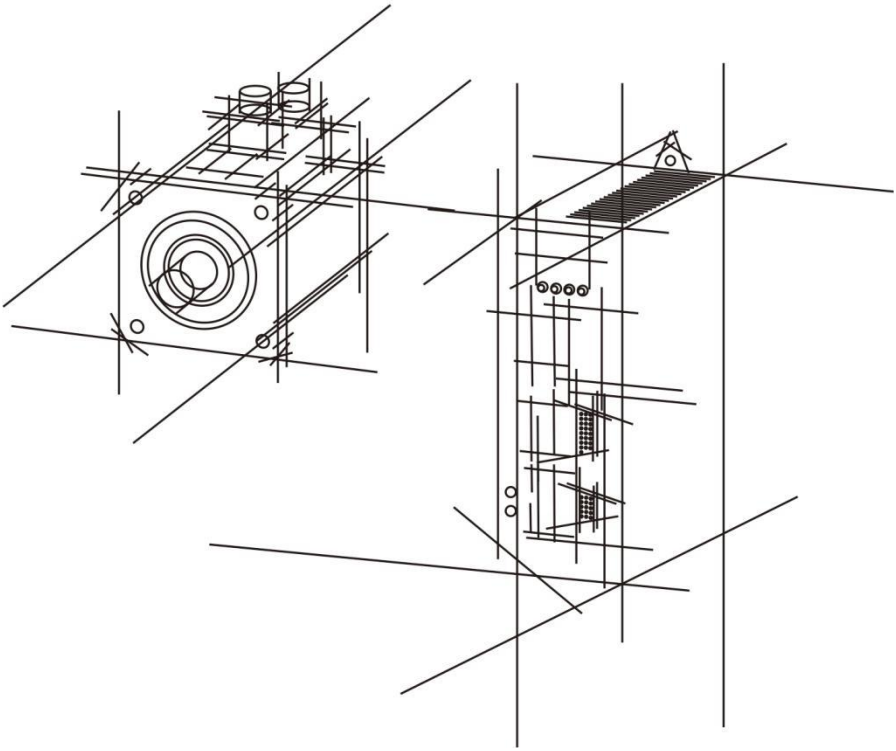

Safety Caution

Before product storage, installation, wiring, operation, inspection or maintenance, the user must be familiar and comply with the following important matters to ensure to use the product safely .

Danger Misoperation would cause danger and personal injury.

Attention Misoperation may cause danger, personal injury and damage the equipment.

Prohibition Behavior is strictly prohibited, otherwise it will lead to equipment damage or can not be used.

1.Application

Danger
● Forbidden to use the product when it is exposed to water gas, corrosive gas and combustible gas. Or it could cause an electric shock or a fire. ● Forbidden to use products in places with more direct sunlight, dust, salt and metal powder. ● Forbidden to use products in places where water, oil and medicine are dripping.

2.Wiring

Danger
● Please ground the grounding terminal reliably. Poor grounding may cause electric shock or fire. ● Please do not connect 380V power supply to 220 V servo drives, otherwise it will cause equipment damage and electric shock or fire.

- The U、V、W motor output terminal and the motor wiring terminal must be connected one-to-one correspondence, otherwise the motor may cause equipment losing and casualties caused by the over speed vehicle.
- Please fasten the power supply and motor output terminals, otherwise it may cause fire.

3.Operation

Caution

- When the mechanical equipment starts operation, it must match proper parameters. If it does not adjust to the appropriate setting values, it may cause the mechanical equipment to lose controlling.
- Before starting operation, please confirm if you can start emergency switch shutdown at any time.
- Please test whether the servo motor is running normally without load firstly, and then connect the load to avoid unnecessary loss.
- Do not switch on and off power frequently, otherwise it will cause drive overheating.

4.Working

Prohibition

- When the motor is running, it is forbidden to touch any parts in rotation, otherwise it will cause casualties.
- When the equipment is in operation, it is forbidden to move connecting cables, otherwise it will cause injury to the person or damage to the equipment.

CONTENT

Chapter 1 Product Inspection And Installation..... - 1 -
1.1 Product Inspection..... - 1 -
1.2 Product Front Panel..... - 2 -
1.3 Product Installation..... - 3 -
Chapter 2 Servo Specifications..... - 6 -
2.1 Servo Drive Specification..... - 6 -
2.2 Servo Drive Naming Rule..... - 7 -
2.3 Servo Motor Naming Rule..... - 7 -
2.4 Servo Motor And Matched Servo Drive List..... - 8 -
Chapter 3 Drive And Motor Dimension..... - 9 -
3.1 Drive Dimension..... - 9 -
3.2 Motor Dimension..... - 10 -
Chapter 4 Drive System Wiring And Introduction..... - 12 -
4.1 Servo System Wiring..... - 12 -
4.2 Servo driver terminals Introduction..... - 14 -
4.3 Main Circuit Terminal..... - 15 -
4.4 CN1 Control Signal Terminal..... - 17 -
4.5 CN2 Encoder Signal Terminal..... - 28 -
4.6 CN3 And CN4 Terminal Definition..... - 29 -
4.7 Anti-jamming Countermeasures of Power Wiring..... - 32 -
Chapter 5 Running Mode And Controlling Wiring..... - 36 -
5.1 Position Control Mode..... - 37 -
5.2 Speed Control Mode Wiring..... - 43 -
5.3 Torque Control Mode..... - 46 -
5.4 Origin Regression Function And Relevant Parameters Introduction.... - 49 -
5.5 Pre-operational Inspection..... - 52 -
Chapter 6 Operation And Display..... - 53 -
6.1 Drive Panel Introduction..... - 53 -
6.2 Main Menu..... - 54 -
6.3 Steps To Set Parameters..... - 54 -
6.4 Status Monitoring..... - 55 -
6.5 Analog Quantity Zeroing Adjustment..... - 56 -
6.6 Encoder Selection..... - 56 -

6.7 How To Recover Default Parameters.....- 57 -
Chapter 7 Parameters.....- 58 -
7.1 PA Group..... - 58 -
7.2 P3 Group Parameters For Multifunctional Terminals.....- 79 -
7.2.1 Parameter Table.....- 79 -
7.3 P4 Group Parameters For Internal Position Command..... - 89 -
Chapter 8 Error Code..... - 96 -

Chapter 1 Product Inspection And Installation

1.1 Product Inspection

This product has made the complete function test before delivery, Please check below points after unpacking. (for prevented the product to be abnormal owing to shipping process, please make detail inspection as the following items after breaking the seal:)

- （Inspect the types of servo driver and servo motor and ensure that are the same types in the order form.）The purchased product is identical with your desired.
- Please do not power it on if there is any damage on the product appearance.
- Inspect the parts of servo driver and servo motor to see any loosen parts such as loosened or fallen off screw.
- Rotate the servo motor shaft by hand and should be smooth rotation.

However, the servo motor with holding brake is unable to rotate directly. If there is any break down item or abnormal phenomenon mentioned above, please contact with the dealer immediately.

If there is any discrepancy, please contact the purchasing agents.

1.2 Product Front Panel

Applicable types：P100S-40、P100S-75

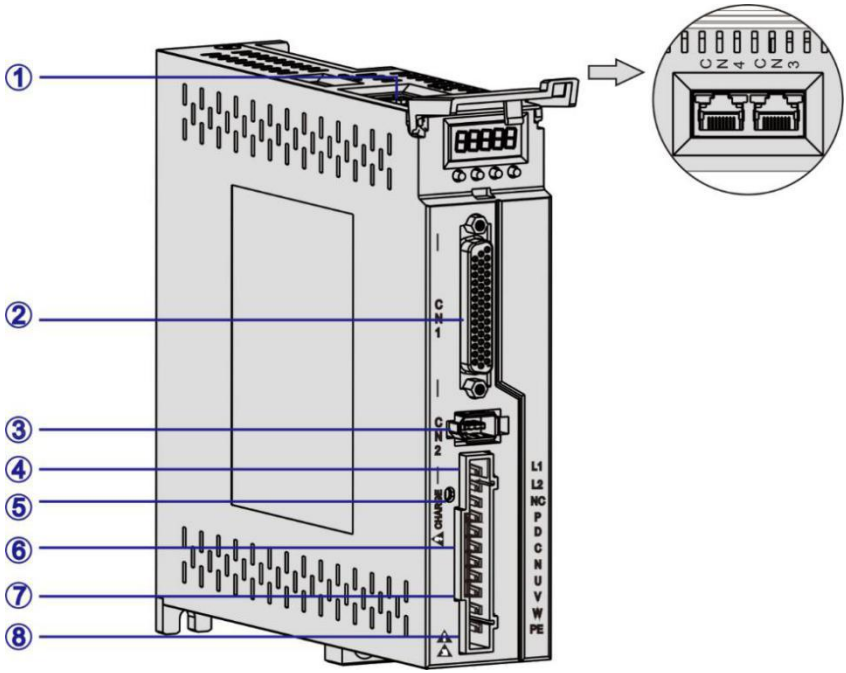

Pic 1.1 P100S Front Panel Introduction

Item	Terminal	Introduction
①	CN3、CN4	Communication terminal
②	CN1	Input and output control signal terminal
③	CN2	Encoder signal terminal
④	L1,L2	Power supply terminal
⑤	CHARGE	Bus voltage indicator. It is used to indicate the bus capacitance in a charged state. When the indicator lights on, even if the power supply is off, the internal capacitor of the servo unit may still have a charge. Therefore, do not touch the power terminal when the lights on to avoid electric shock.
⑥	P,D,C,N	Regeneration resistance terminal
⑦	U,V,W	Servo motor UVW connection terminal
⑧	PE	Ground terminal

1.3 Product Installation

1.3.1 Servo Drive Installation

- Installation direction

The normal mounting direction of the servo drive is vertical and upright..

- Fixed installation

During installation, please tighten the 2pcs M4 fixing screws at the back of the servo drive.

- Grounding

Be sure to ground the driver grounding terminal, otherwise there may be a risk of electric shock or interference to produce wrong action.

- Wiring requirement

When connecting the drive, please wire the cable down (refer to the below picture) to avoid any liquid attached on the cable and then it flows into the drive along with the cable.

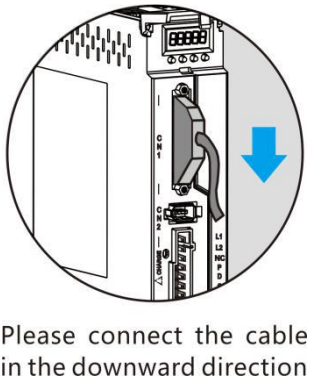

Pic 1.2 Wring Direction Requirement

- Installation interval

Refer to pic 1.3 for the distance between drives and installation intervals with other devices,and please note that the picture indicates the smallest size, in order to ensure the performance and life of the drives, please leave the full installation interval as far as possible.

- Cooling

The servo drive adopts natural cooling mode and forced heat dissipation mode.

- Installation considerations

Prevent dust or iron chips from entering the servo drive when installing the electrical controlling cabinet.

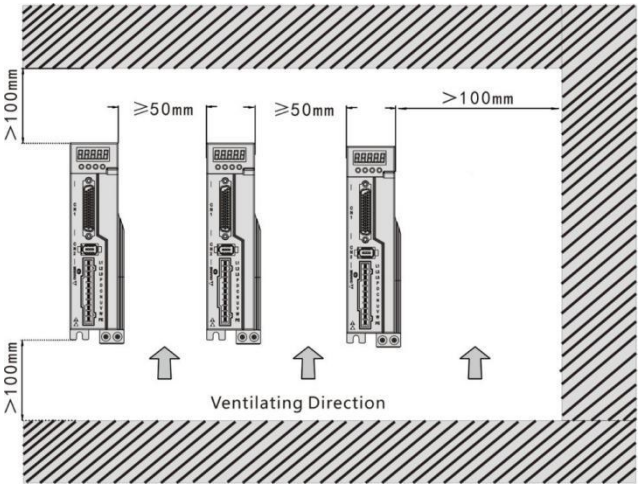

Pic 1.3 Installation Interval

1.3.2 Environment Condition For Installation

Since the environment conditions for servo driver installation have the direct influence to the normal function and service life of the servo driver, therefore the environment conditions must be conformed to the following conditions:

- Ambient temperature: 0 to 40℃; Ambient humidity: less than 80% (no condense).
- Storage temperature: -40 to 50℃; Storage humidity: less than 93% (no condense).
- Vibration: less than 0.5G.
- Preventive measure shall be taken against raindrop or moist environment.
- Avoid direct sunlight.
- Preventive measure shall be taken against corrosion by oil mist and salinity.
- Keep away from radioactive and inflammable substances.
- Free from corrosive liquid and gas.

1.3.3 Servo Motor Installation

- For horizontal installation： In order to prevent water, oil, etc. from entering inside of the servo motor, please put the cable connector downward.
- For vertical installation: if the shaft of the servo motor is in upward direction with a speed reducer, some prevention measure shall be taken43 against entering inside of the servo motor by oil come from the speed reducer.
- In case of installation or removing the servomotor, please do not hit the servo motor with a hammer, otherwise the shaft and the encoder can be damaged.

1.3.4 Motor Rotation Direction Definition

The motor rotating direction description in this handbook is defined as facing the shaft of the servo motor, if the rotating shaft is in counterclockwise direction will be called as positive direction, or in clockwise as reversal direction.

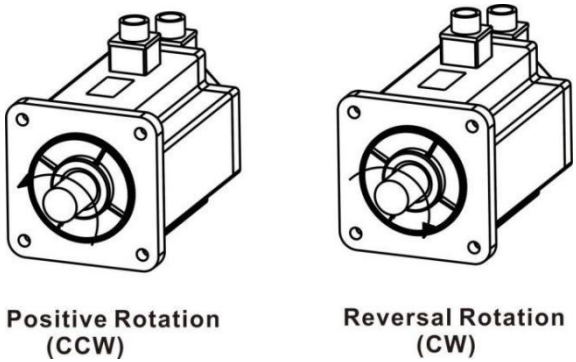

Pic1.4 Motor Rotation Direction

Chapter 2 Servo Specifications

2.1 Servo Drive Specification

<table>
<tr><th>Model</th><th colspan="2">P100S-40</th><th>P100S-75</th></tr>
<tr><td>Power</td><td colspan="2">0.05KW~0.4KW</td><td>0.75KW~1KW</td></tr>
<tr><td>Main Circuit</td><td colspan="3">1 phase AC220V-15%~10% 50/60Hz</td></tr>
<tr><td>Control Mode</td><td colspan="3">0：Position. 1：Speed. 2：Torque. 3：Position and speed. 4：Position and torque. 5：Speed and torque</td></tr>
<tr><td>Protection Function</td><td colspan="3">Over speed, Over voltage, Under voltage,Overload, Abnormal of main power, Abnormal encoder, Out of position error etc.</td></tr>
<tr><td>Monitor Function</td><td colspan="3">Speed, Current position, Command pulse accumulation,Position deviation, Motor torque, Motor current, Running state etc.</td></tr>
<tr><td>Control Input</td><td colspan="3">1：Servo on 2：Alarm clearance 3：CCW drive inhibition 4：CW drive inhibition 5：Deviation counter clearance 6：Command pulse inhibition 7：CCW torque limit 8：CW torque limit</td></tr>
<tr><td>Control Output</td><td colspan="3">Servo ready/Servo alarm/Positioning completion/Mechanical braking</td></tr>
<tr><td>Regeneration Braking</td><td colspan="3">Built-in/ Built-out</td></tr>
<tr><td>Load</td><td colspan="3">Less than 3 times of motor torque</td></tr>
<tr><td>Display</td><td colspan="3">5 LED digital display and 4 keys</td></tr>
<tr><td>Communication</td><td colspan="3">RS485</td></tr>
<tr><td rowspan="5">Position Control Mode</td><td rowspan="4">Input Mode</td><td colspan="2">0：pulse+direction</td></tr>
<tr><td colspan="2">1：CCW/CW pulse</td></tr>
<tr><td colspan="2">2：A/B phase orthogonal pulse</td></tr>
<tr><td colspan="2">3：Internal position control</td></tr>
<tr><td colspan="2">Electronic gear ratio</td><td>1-32767/1-32767</td></tr>
</table>

2.2 Servo Drive Naming Rule

P	100	S -	40	- □□□
①	②	③	④	⑤

Serial No.	Definition
①	P series ac servo drive
②	Power: 100:0.05KW~1KW; 200:1KW~2KW.
③	S:Simple function type. H:Full function type.
④	The branch power range below 1KW: 40: 0.05KW~0.4KW; 75:0.4KW~0.75KW.
⑤	Customization.

2.3 Servo Motor Naming Rule

DB	80	- 024	30	A6 -	TJA	B
①	②	③	④	⑤	⑥	⑦

Serial No.	Definition
①	DB: 5 pair poles ac servo motor.
②	Flange: 40(mm),60(mm),80(mm),90(mm),110(mm),130(mm).
③	Rated torque(×0.1N.m): 048=4.8N.m.
④	Rated speed(×100rpm): 30=3000rpm.
⑤	Encoder resolution: A6=17-bit single turn absolute.
⑥	TJA: AMP connector.
⑦	B: with a brake, Null: without a brake.

NOTE

1. The code 02430 means the motor rated toque is 2.4N.m and rated speed is 3000rpm.
2. The rated power: P=0.1047×N×T=0.1047×2.4×3000=753.84W≈0.75KW. T=rated torque, N=rated speed.

2.4 Servo Motor And Matched Servo Drive List

Flange	Model	Power (W)	Speed (RPM)	Matched Drive	Encoder
40mm	DB40-00330A1-TJA(B)	100	3000	P100S-40	17-bit single turn absolute encoder
60mm	DB60-00630A6-TJAB)	200	3000		
	DB60-01330A6-TJA(B)	400	3000		
80mm	DB80-02430A6-TJA(B)	750	3000	P100S-75	
	DB80-03230A6-TJA(B)	1000	3000		

Chapter 3 Drive And Motor Dimension

3.1 Drive Dimension

The user can install the servo drive with the bottom plate and the installed direction is perpendicular to the installation facing. Recommended to cool the servo drive with fan or natural cooling.

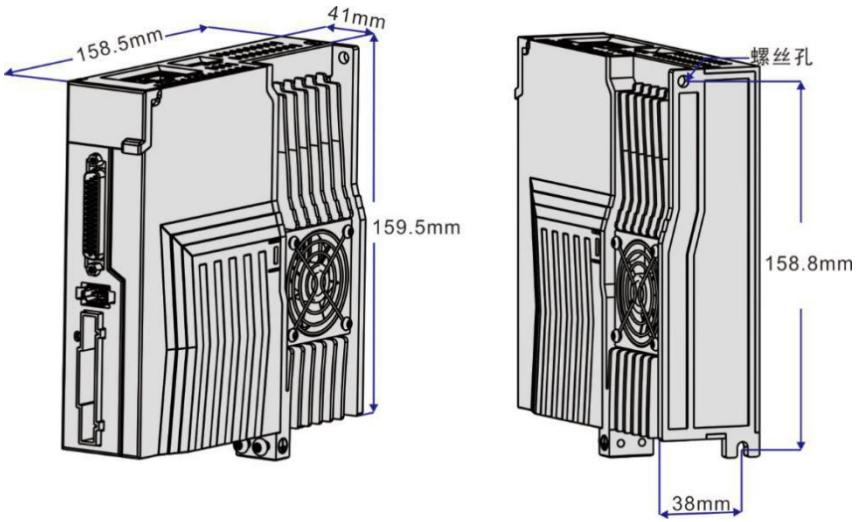

Pic 3.1 P100S-40/P100S-75 Dimension

NOTE

◆ P100S-40 doesn't have the heat sink with a fan.

3.2 Motor Dimension

- Flange 40mm

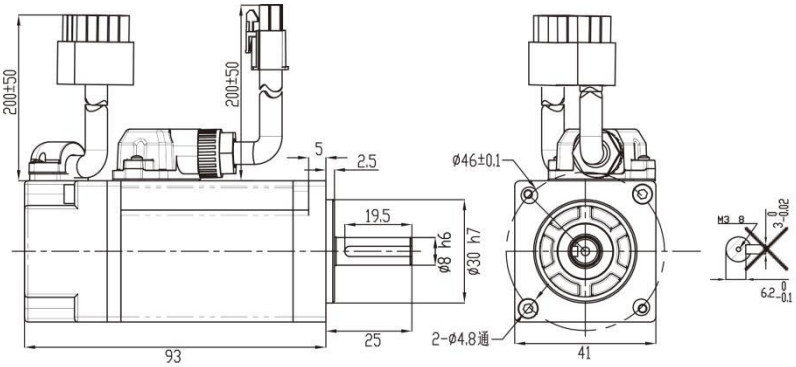

Pic 3.2 Flange 60mm And Table 3-1

Model	DB40-00330A6-TJA
L（mm）	93

- Flange 60mm

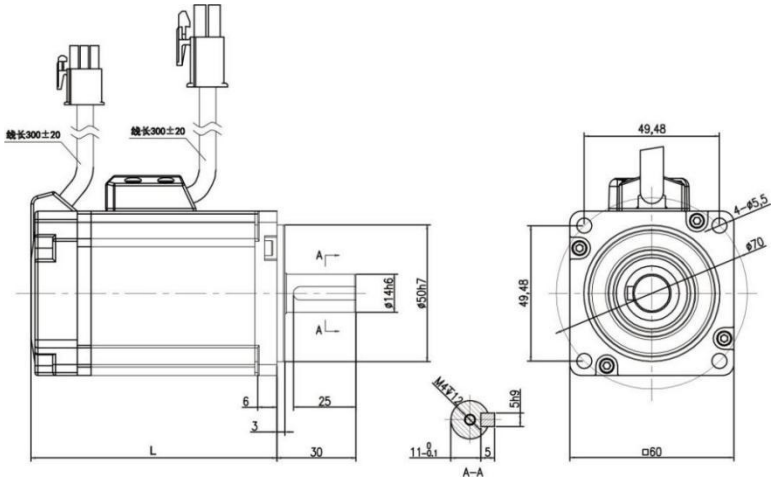

Pic 3.3 Flange 60mm And Table 3-2

Model	DB60-00630A6-TJA	DB60-01330A6-TJA
L（mm）	72	90

- Flange 80mm

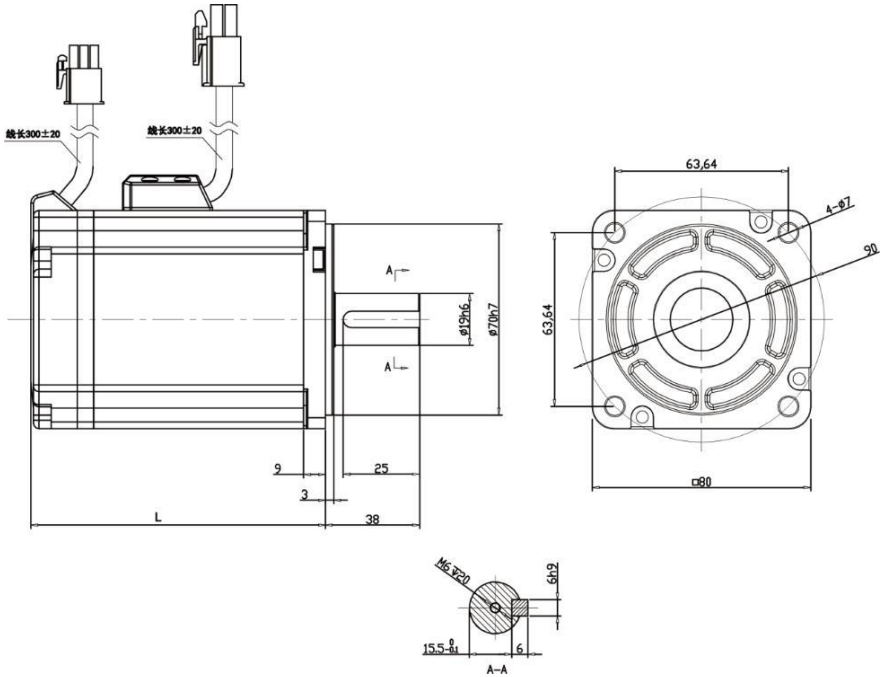

Pic 3.4 Flange 80mm And Table 3-3

Model	DB80-02430A6-TJA	DB80-03230A6-TJA
L（mm)	96	113.5

Chapter 4 Drive System Wiring And Introduction

4.1 Servo System Wiring

4.1.1 Servo Drive Wiring

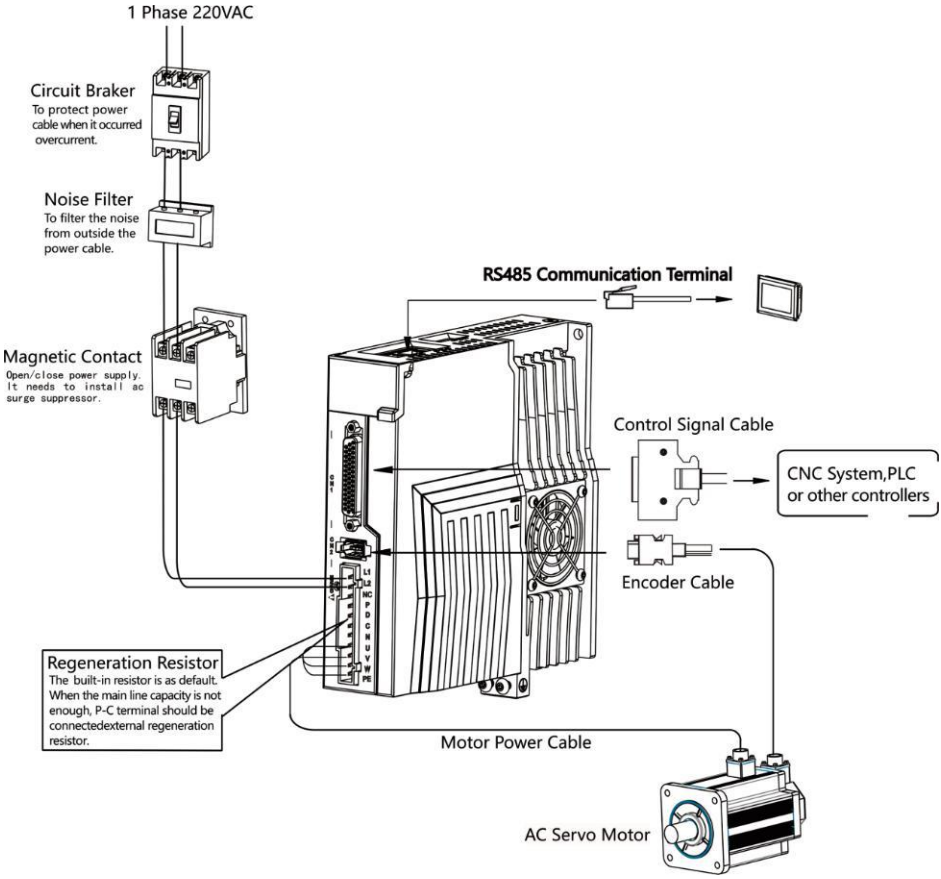

Pic 4.1 Servo System Wiring

4.1.2 Wiring Introduction

Wiring Notes:

- The control cable length should be less than 3 meters and the encoder cable length 20 meters.
- Check that the power supply and wiring of L1,L2 are correct.
- Please do not connect to 380V power supply.
- The output terminals(U,V,W) must be connected with the servo motor connections(U,V,W) correspondently, otherwise the servo motor will stop or over speed. However, by exchanging three-phase terminal cannot cause the motor to reverse; this point is different with asynchronous motor.
- Earthed wiring must be reliable with a single-point connection.
- Pay attention to the correct direction of freewheel diode which is connected with the delay at the output terminal, other can cause the output circuit breakdown.
- In order to protect the servo driver from noise interference that can cause malfunction, please use an insulation transformer and noise filter on the power lines.
- Wiring the power cables(power supply , main circuit ,etc) at a distance over 30cm away from the control signal cables, do not lay them together.
- Install a non-fuse circuit breaker that can shut off the external power supply immediately for in case of the servo driver fault.

4.1.3 Electric Wire Specifications

Connect Terminal	Symbol	Wire Specification
Main Power Supply	L1、L2	1.5~4mm^2
Servo Motor	U、V、W	1.5~4mm^2
Ground	⏚	1.5~4mm^2
Control Signals	CN1	≧0.14mm2(AWG26), Shielded.
Encoder Signals	CN2	≧0.14mm2(AWG26), Shielded.
Regenerative Resistors Terminals	P、D/P、C	1.5~4mm^2

NOTE

◆ Must use a twisted pair wire cable for the encoder signal wiring. If the encoder signal cable is too long(＞20m), in which the encoder power supply can be insufficient, may use multi wires or thick wire for the power supply wiring.

4.2 Servo driver terminals Introduction

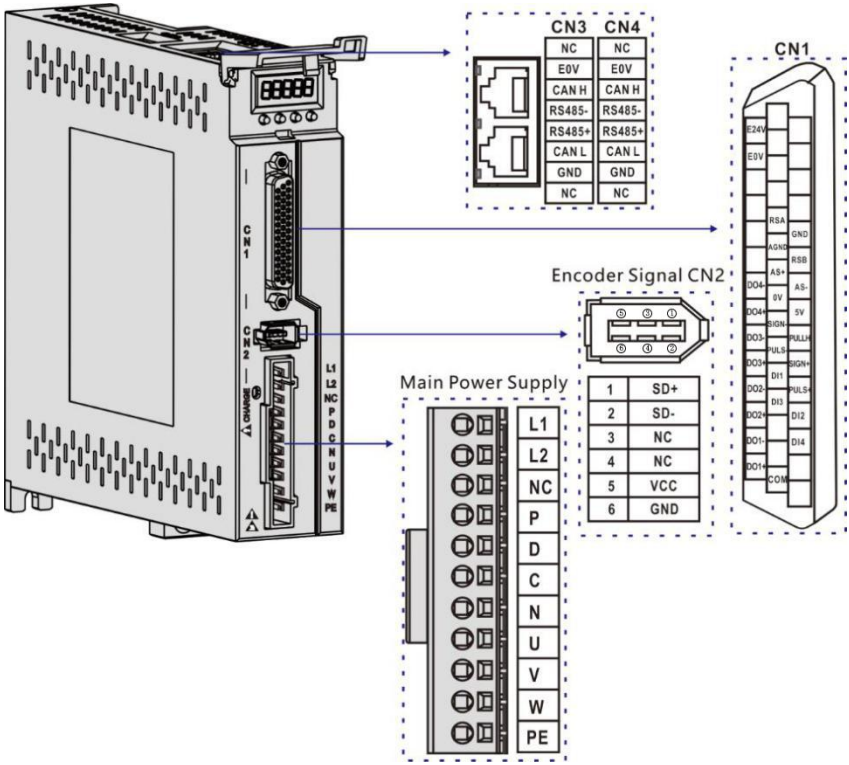

Pic 4.2 P100S Drive Terminals

◆ The above picture shows the pins arrangement of the drive.

4.3 Main Circuit Terminal

4.3.1 Main Circuit Terminal Introduction

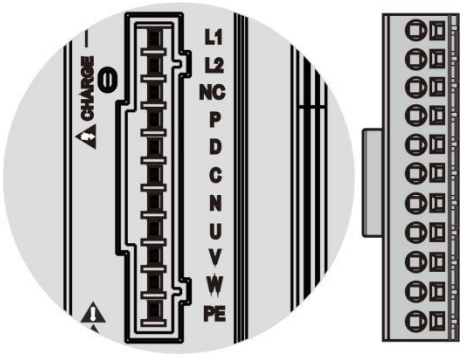

Pic 4.3 Main Circuit Terminal

Terminal Name	Symbol	Detailed Explanation
Main Power Supply	L1、L2	Connect to external AC power supply ,1 phase 220VAC -15%~+10%，50/60Hz.
	NC	Null
Regenerative Resistance	P、D	When use the built-in resistor,please connect P and D.
	P、C	When the external regeneration resistance is required, please disconnect P and D and crossover it to terminal P and C. Leaving N disconnected.
Servo Motor	U、V、W	UVW phase output to servo motor.
	⏚	Ground with servo motor and power supply.

NOTE

◆ The built-in resistor has been set as default by factory: P and D connector are in short-cut condition.

4.3.2 Regeneration Resistance Connection

If use the built-in resistor, please connect P and D(a 4 pins connector for built-in resistor has been set by factory, so you can insert it to the terminal directly), as picture A showed.

When an external regeneration resistance is connected to the servo drive, the short circuit between terminal P and D must be disconnected. Then the external regeneration resistance could be connected between P and C, and leave N alone,as picture B showed.

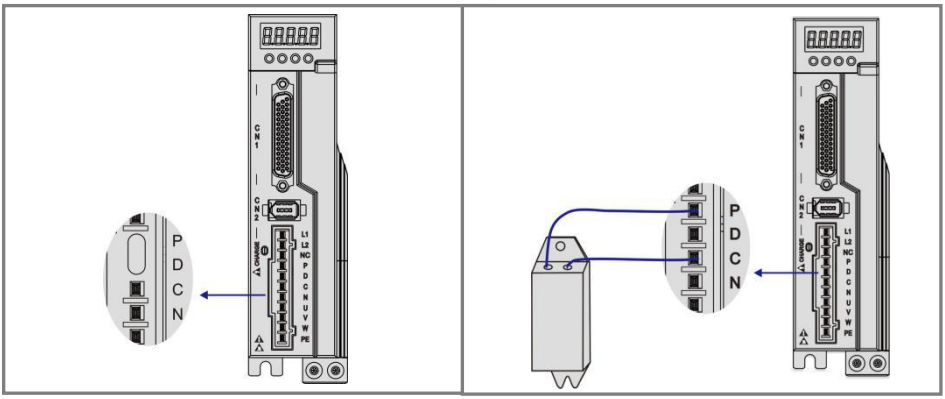

Pic A Pic B

NOTE

◆ Do not connect the external brake resistance to the positive and negative poles of the bus P、N, otherwise it will cause explosion and fire.

◆ Must be over minimum resistance value at 25Ω. Otherwise it would cause drive alarm or damage.

◆ Please install external brake resistance on non-combustible materials such as metal.

4.4 CN1 Control Signal Terminal

4.4.1 CN1 Terminal Introduction

The CN1 connector DB44 plug provides the signals interfaced with the host-controller. The signal includes:

- 4 programmable input terminals
- 4 programmable output terminals
- Analog command inputs
- Pulse command inputs

4.4.2 CN1 terminal pin distribution

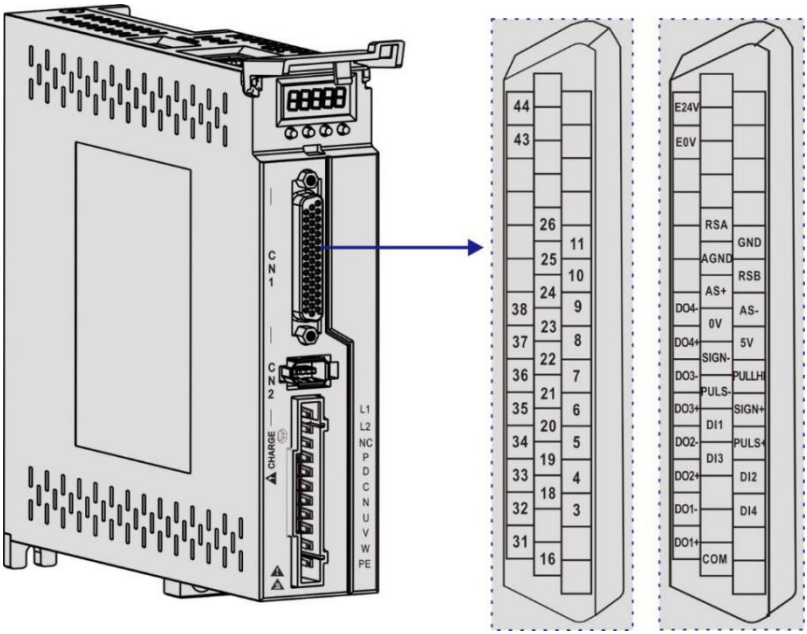

Pic 4.4 CN1 Terminal Pin Distribution

NOTE

◆ A 24-26 AWG cable is recommended.

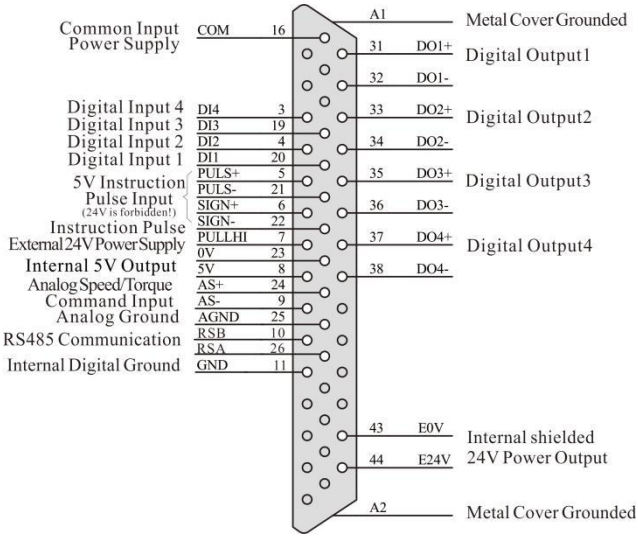

Pic 4.5 CN1 Terminal

4.4.3 Position Instruction Input Signal

Signal Name		Pin No.	Function
Position Pulse Instruction	PULS+	5	High speed photo isolation input. Working mode is set by parameter PA14: ● Pulse+direction. ● CCW/CW pulse. ● A、B orthogonal pulse. ● Input of internal position control.
	PULS-	21	
	SIGN+	6	
	SIGN-	22	
	PULLHI	7	External 24V power input interface of the instruction pulse.
	GND	11	Internal digital signal ground.

The output circuit of instruction pulse of the upper device side can be selected from the differential output or collector open circuit output . Its maximum input frequency and minimum pulse width are shown in the following table:

pulse mode	maximun-frequency (pps)	Minimum pulse width(us)
differential output	500k	1
collector open circuit	200k	2.5

NOTE

◆ If the output pulse width of the upper device is less than the minimum pulse width, it will cause the drive to receive error pulses.

◆ The terminal between PULS+ and PULS-/SIGN+ and SIGN- only support below 5V signal. If over than 5V, it needs to connect external resistances.

Input Circuit Of Pulse Instruction Diagram

1） When it is differential mode:

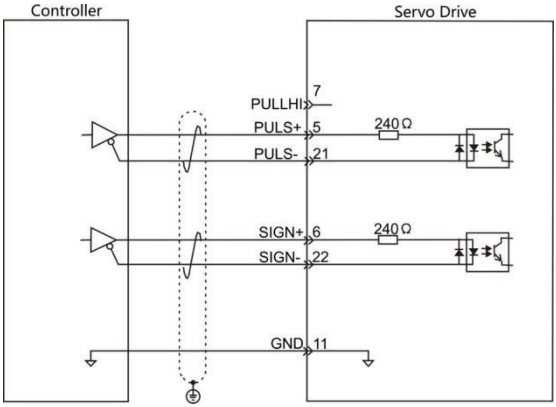

2）When it is collector open mode:

A） For internal 24V power sources:

- Common Anode Connection, for example: Mitsubishi PLC.

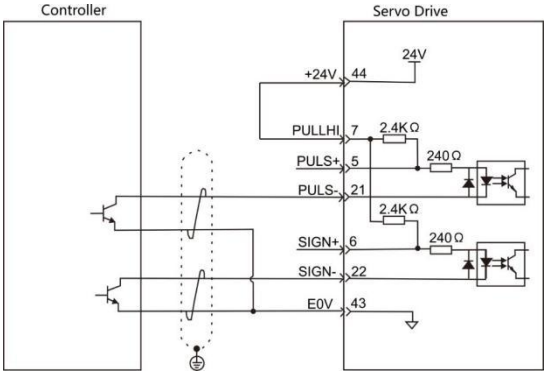

- Common Cathode Connection, for example: Siemens PLC.

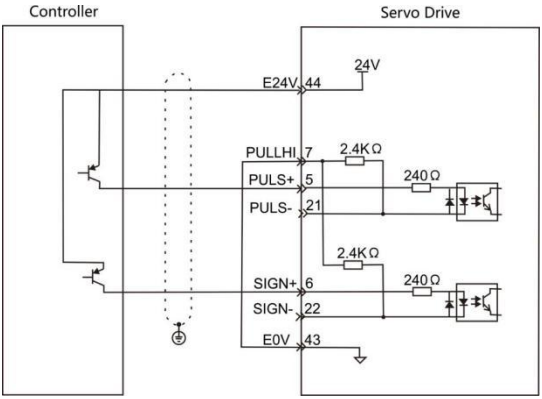

B）For external power supply:

Case 1: To use internal resistance of the drive (recommended).

- Common Anode Connection：

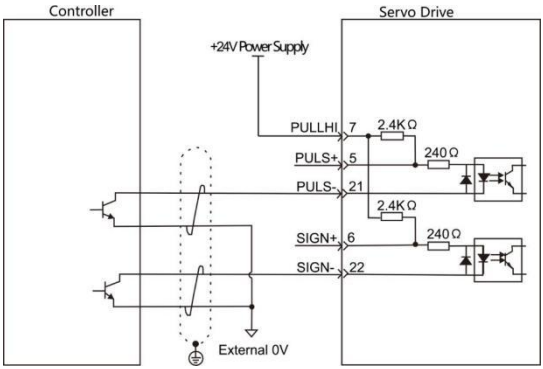

- Common Cathode Connection:

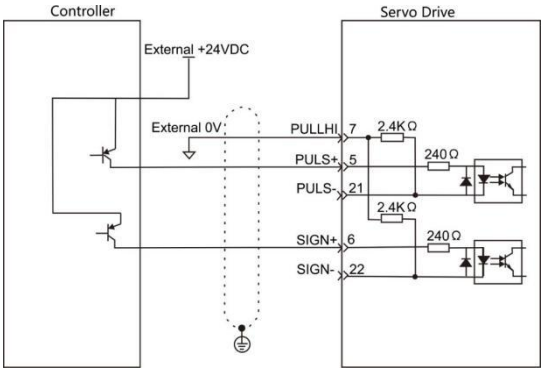

Case 2: To use external resistance of the drive.

- Common Anode Connection：

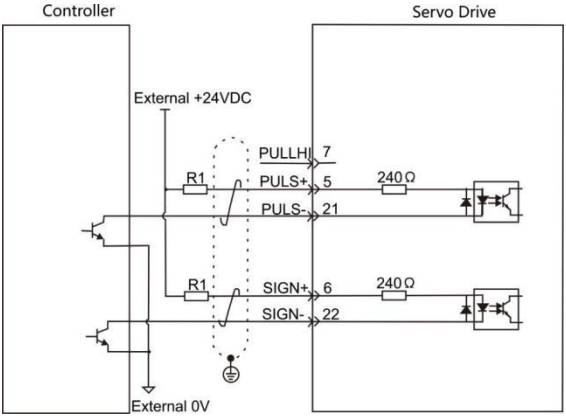

- Common Cathode Connection:

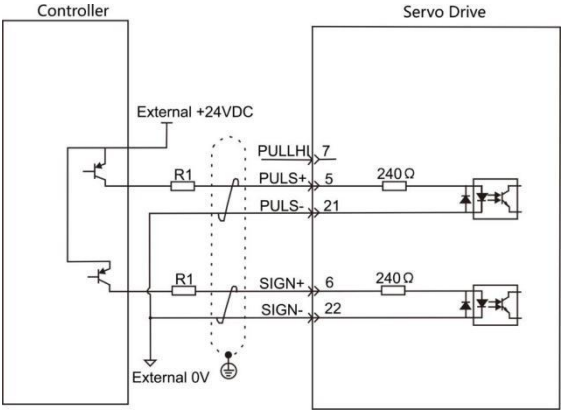

NOTE

◆ How to calculate the value of resistanceR1：

$$\frac{VCC-1.5}{R1+240}=10mA$$

Table 4-1 R1 Recommendation

VCC Voltage	R1	Power
24V	2.4KΩ	0.5W
12V	1.5KΩ	0.5W

4.4.4 Digital Quantity Input And Output Signal

Signal Name		Pin No.	Function	Introduction
Digital Input	DI1	20	Servo enable	Optocoupler input and function can be programmable.Defined by parameter P3 group(P3-0~P3-17). The input voltage of COM is both of common positive and negative terminal. And input signal voltage is 12~24V. In position mode (internal position mode) and non-position mode ,please connect 24 V to pin 7, DI5 to pin21, DI6 to pin 22. Or to connect 0 V to pin7, DI5 to 5 pin ,DI6 to pin 6.
	DI2	4	Alarm clearance	
	DI3	19	CW drive inhibition	
	DI4	3	CCW drive inhibition	
	PULS-	21	In position mode (internal position mode) and non-position mode	
	SIGN-	22		
	PULS+	5		
	SIGN+	6		
	PULLHI	7		
	COM	16	Common end of digital input signals	
Digital Output	DO1+	31	Z signal output	Photo isolation output.Function can be programmable. Defined by parameter P3 group (P3-20~P3-23). Remark: When PA104=1, the differential output can be programed by P3-24.
	DO1-	32		
	DO2+	33	Alarm output	
	DO2-	34		
	DO3+	35	Positioning completion	
	DO3-	36		
	DO4+	37	Magnetic brake	
	DO4-	38		
	DO5+/ RSA	26	Z signal differential output	
	DO5-/ RSB	10		
Internal Power Output	0V	23	Internal 0V	Internal 5V power output and the max output current 200mA.
	5V	8	Internal 5V	
	E0V	43	Internal 0V	Internal isolated 24V power output and the voltage range is 20V~28V and max output current 100mA.
	E24V	44	Internal 24V	

- **Input Circuit Of Digital Quantity Diagram**

For DI1 as an example(the DI1~DI4 interface circuit is the same)：

1） When the upper device is relay output：

A) For internal 24V power supply:

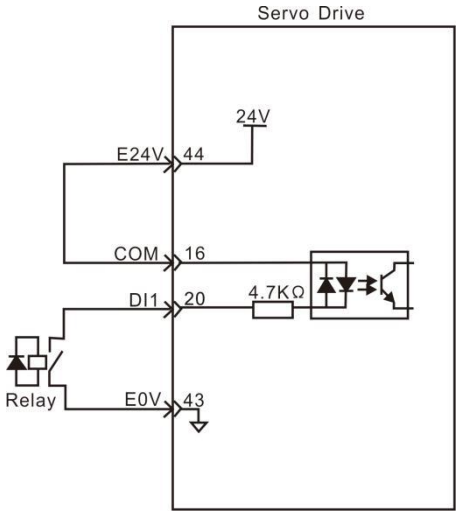

B) For external 24V power supply:

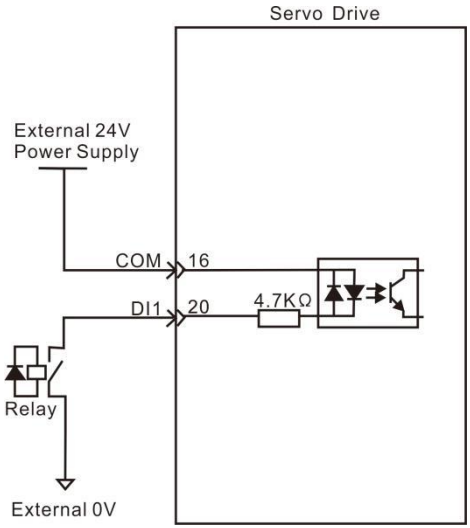

2) When the upper device is collector open output:

A) For internal 24V power supply:

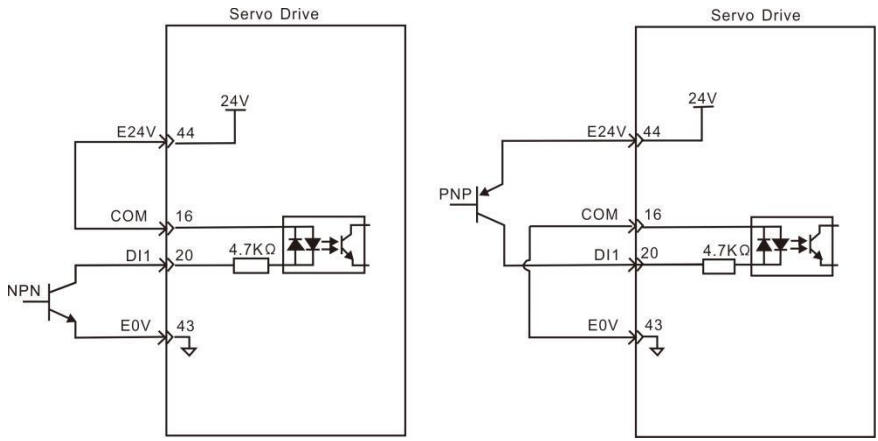

B) For external 24V power supply:

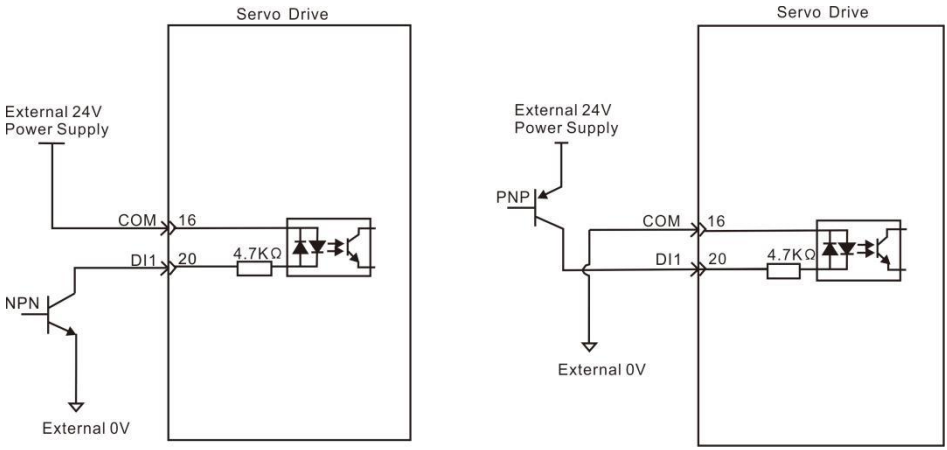

NOTE

Note:

◆ Do not support PNP mixed with NPN input.

- **Output Circuit Of Digital Quantity Diagram**

For DO1 as an example(the DO1~DO4 interface circuit is the same)：

1) When the upper device is relay input：

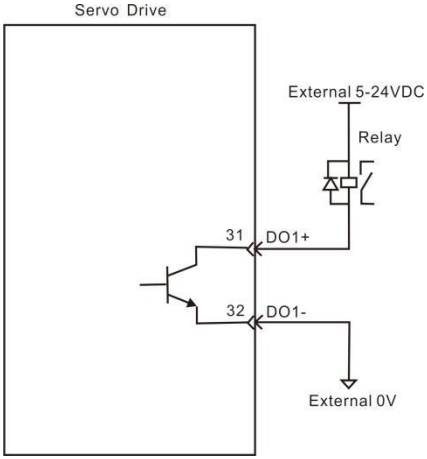

2) When the upper device is optocoupler input:

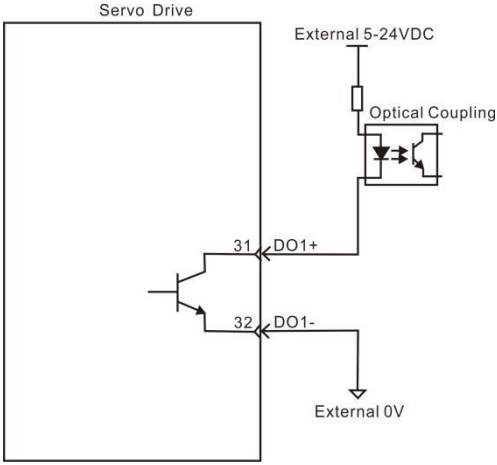

NOTE

- ◆ Be sure to connect a continuation diode when the upper device is a relay, otherwise it may damage DO ports or cause strong signal interference.
- ◆ The maximum allowable voltage and current capacity of the optocoupler output circuit in the servo drive are as follows:
- ■ Voltage：DC30V
- ■ Current：DC50mA

4.4.5 Analog instruction signal

Signal Name		Pin No.	Function
Analog Instruction Input	AS+、AT+	24	Analog velocity/torque input, range: -10V~+10V.
	AS-、AT-	9	
	AGND	25	

Pulse Instruction Input Interface Diagram

Two input types: differential (recommended) and single-end. Speed and torque share one analog input at range from -10V to +10V with resistance approximately at 10 KΩ. The existence of zero bias in the analog input is normal and can be compensated by parameters.

1） When it is analog differential input:

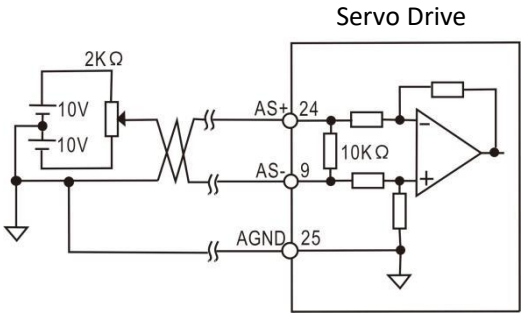

2） When it is analog single-end input:

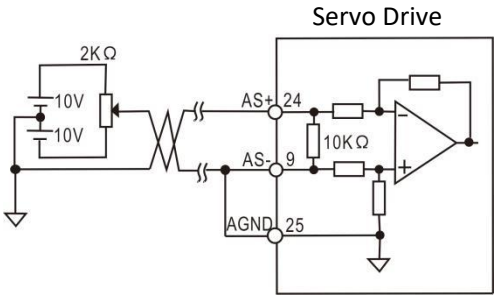

4.4.6 Motor Brake Connection

The brake lock is the mechanism that prevents the servo motor shaft from moving when the servo drive is in non-enabled state, so that the motor keeps the position locked and the moving part of the machinery will not move because of itself or external force.

Brake Signal Circuit Diagram

The brake connection of the input signal without polarity, but it needs users to prepare a 24V power supply. An example of the standard connection between the brake signal BK and the 24V power supply is shown below:

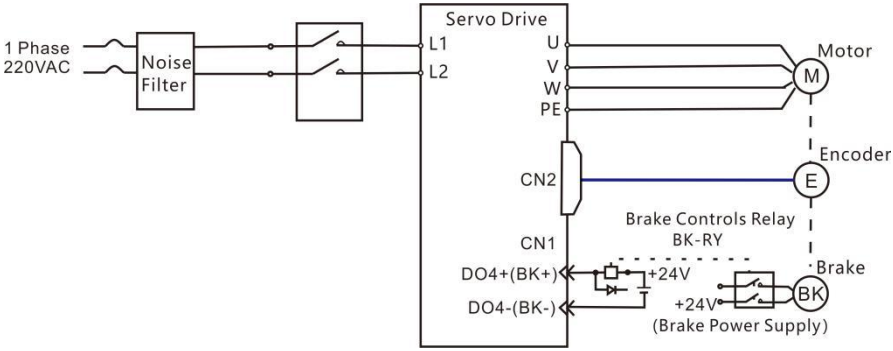

Pic 4.6 Brake Signal Connection

NOTE

◆ The brake mechanism built into the servo motor is a fixed special mechanism of non-electric action type, which can not be used for braking purposes. Only when the servo motor is kept in a stop state can it work.

◆ The brake coil has no polarity.

◆ After the servo motor stops, the servo signal (Servo On) should be cut off.

◆ When the motor with the built-in brake is running, the brake may make a "click" sound, which has no effect on its function.

When the brake coil is electrified (open state of the brake), flux leakage may occur at the shaft end and other parts. Therefore the nearby devices might be interfered..

◆ It is forbidden to share the power supply with other electrical appliances, which is to prevent the voltage or current from decreasing resulting to the wrong work due to other electrical appliances.

◆ Above 0.5 mm^2 cable is recommended.

4.5 CN2 Encoder Signal Terminal

4.5.1 CN2 Terminal Introduction

The encoder signal connector CN2 connects with the servo motor encoder. A 6 pins plug is used. The pin chart is:

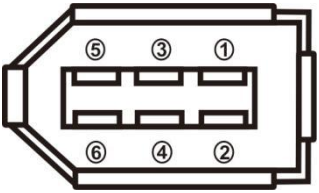

Pic 4.7 CN2 Encoder Signal Terminal

4.5.2 CN2 Signal Introduction

Signal Name		Pin No.	Function
Encoder Power Supply	5V	5	Use 5V power supply (Provided by servo driver). If the cable is longer than 20m, in order to prevent encoder from voltage dropping down, it is better to use multi wires or thick wires for power line and ground line.
	0V	6	
Absolute encoder communication positive end	SD+	1	Absolute encoder communication positive end
Absolute encoder communication negative end	SD-	2	Absolute encoder communication negative end
Null	NC	3	Reserve
Null	NC	4	Reserve
Shielded layer	Metal cover		Connect to the shielded layer of the encoder cable

4.6 CN3 And CN4 Terminal Definition

4.6.1 Communication Terminal Wiring Diagram

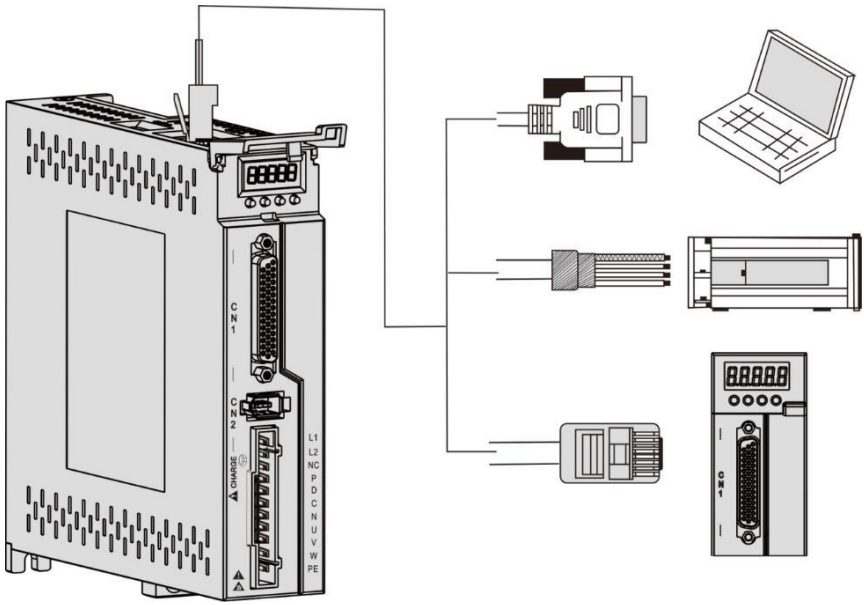

Pic 4.8 Communication Terminal Wiring

4.6.2 Communication port definition

Through the CN3 and CN4 ports on the drive, the communication can be established between the drive and PC、PLC and other drives. The CN3 and CN4 pins are defined as follows:

Terminal	CN3	Name	CN4	Name	Picture
1	NC	Null	NC	Null	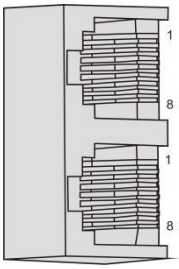
2	E0V	CAN ground	E0V	CAN ground	
3	CAN H	CAN Bus communication	CAN H	CAN Bus communication	
4	RS485 -	RS485 communication	RS485 -	RS485 communication	
5	RS485+		RS485+		
6	CAN L	CAN Bus	CAN L	CAN Bus	
7	GND	485 ground	GND	485 ground	
8	NC	Null	NC	Null	

NOTE

◆ It can connect PC or the upper controllers through a special serial port cable, and it is forbidden to plug with electric.

◆ It is recommended to use twisted pair or shielded wire, the length of the wire is less than 2 meters.

◆ Multi-drives series connected, CN3 connect with last CN4, and CN4 connect with next CN3.

◆ When using RS485 bus communication and RS485 ground signal of the upper controller is connected to the earth (PE), please connect PE terminal of the upper controller with the drive terminal properly. In this case, it is forbidden to connect RS485 ground signal of the upper controller with the drive RS485 ground signal (GND), otherwise the driver may be damaged.

4.6.3 RS485 Communication Connection Introduction

1.Connection With RS485 of A PLC

A connection cable between the driver and the PLC is as follows:

A **B**

Pic 4.9 The Communication Cable Of Servo Drive With PLC

Table 4-2 Connection Between Servo Drive And PLC Communication Cable

Drive RJ45(A end)		PLC（B end）	
Signal Name	Pin No.	Signal Name	Pin No.
RS485+	5	RS485+	5
RS485-	4	RS485-	4
GND	7	GND	7
PE（shielded layer）	Cover	PE（shielded layer）	Cover

2. RS485 Communication Parallel Connection Of Multi Drives

When using 485 communication network, the parallel connection of multi drives is as follows:

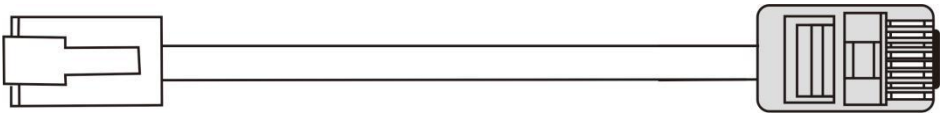

A **B**

Pic 4.10 Parallel Cable Diagram Of Multi Drives

Table 4-3 Connection Between Multi Drives

Drive RJ45(A end)		PLC（B end）	
Signal Name	Pin No.	Signal Name	Pin No.
RS485+	5	RS485+	5
RS485-	4	RS485-	4
GND	7	GND	7
PE（shielded layer）	Cover	PE（shielded layer）	Cover

3. RS485 Communication Grounding Precaution

When using RS485 communication, the GND terminal of the upper device is connected with the GND terminal of the servo drive as shown in the following picture:

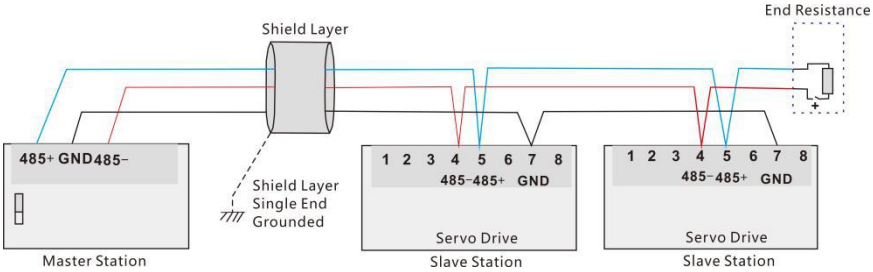

Pic 4.11 RS485 Communication Diagram

As shown in the picture below, when using RS485 communications, the ground signal of the upper device is connected with the earth:

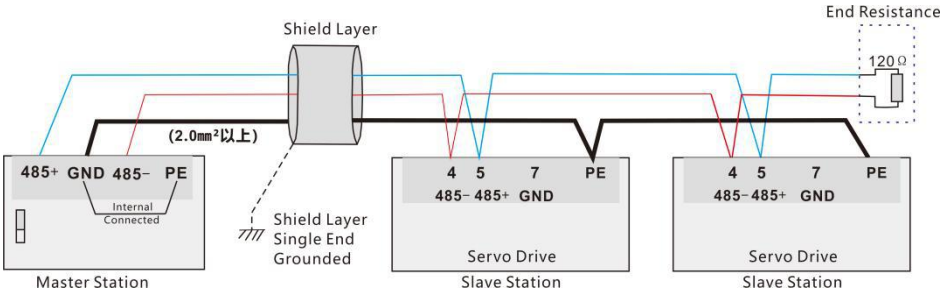

NOTE

- ◆ PLC is built in RS485 communication terminal resistor.
- ◆ It is suggested that the shield layer should be ground at one end.
- ◆ Never connect the GND terminal of the upper device with the servo drive E0V terminal, otherwise the machine will be damaged.

4.7 Anti-jamming Countermeasures of Power Wiring

To suppress interference, please take the following measures:

- Instruction input cable length should be less than 3 meters,and encoder cable should be less than 20 meters.
- Recommend grounding cable over 2.0 mm^2
- Please install a noise filter on the input side of the power cable to prevent radio frequency interference.
- To avoid electromagnetic interfering, the followingmethods can be used:

1) Install the upper device and a noise filter near the servo drive.
2) Install a surge suppressors on coils of relays, solenoids, electromagnetic contacts.
3) Separate high and low voltage cables away minimum at 30 cm.
4) Do not share a power supply with welding devices, discharge processing devices, etc. When there is a high frequency generator nearby, please install a noise filter on the input side of the power cable.

4.7.1 Wiring Examples Of Anti-Jamming And Ground Handling

1. Examples of anti-jamming wiring

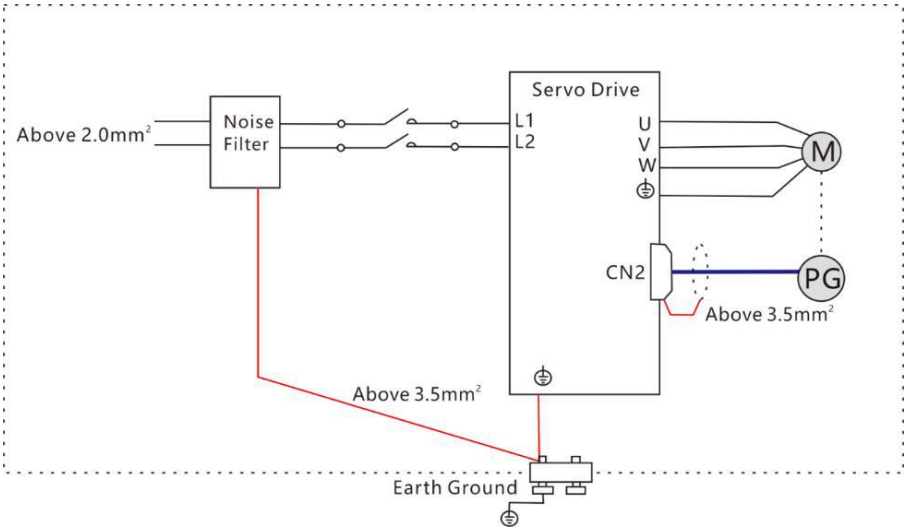

Pic 4.12 A Example Of Anti-Jamming Wiring

NOTE

◆ The cable of the outer box connection used for grounding should be more than 3.5 mm² of coarse wire, and braided copper cables are recommended

2. Ground handling

To avoid electromagnetic interference problems, please ground as below.

1) Grounding of servo motor housing

Please connect the grounding terminal of the servo motor with the grounding terminal PE of the servo driver and ground the PE terminal reliably to reduce the potential electromagnetic interference problem.

2) Encoder Cable Shield Grounding

Please ground both ends of shield layer of motor encoder cable.

4.7.2 How To Use A Noise Filter

In order to prevent the interference of the power cable and weaken the influence of the servo driver on other sensitive devices, please select a corresponding noise filter at the input end of power supply according to the input current. Meanwhile, please install the noise filter at the power cable of peripheral device if needed. Please observe the following precautions when installing and wiring the noise filter so as not to weaken the actual use effect of the filter.

- Please separate the input and output cables of the noise filter, and do not put both into the same pipe or tie them together.

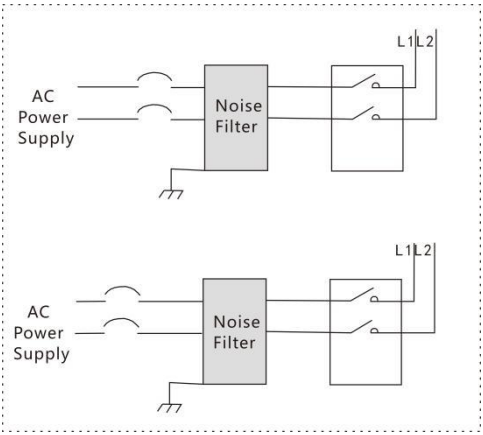

Pic 4.13 Example Diagram Of Noise Filter Input And Output Cables

- The ground wire of the noise filter is separated from its output power cord.

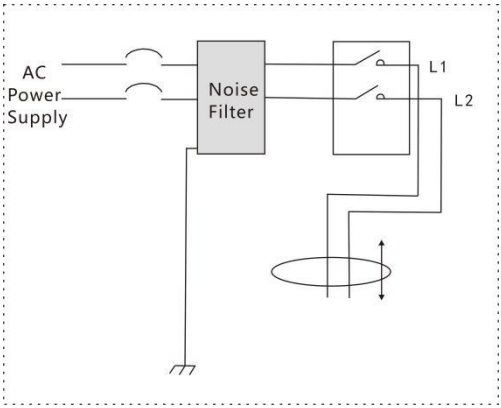

Pic 4.14 Diagram Of Separating Cables Between Ground And Output Line Of Noise Filter

- Noise filters need to use a thick cable as short as possible to ground separately, and do not share a ground wire with other grounding equipment.

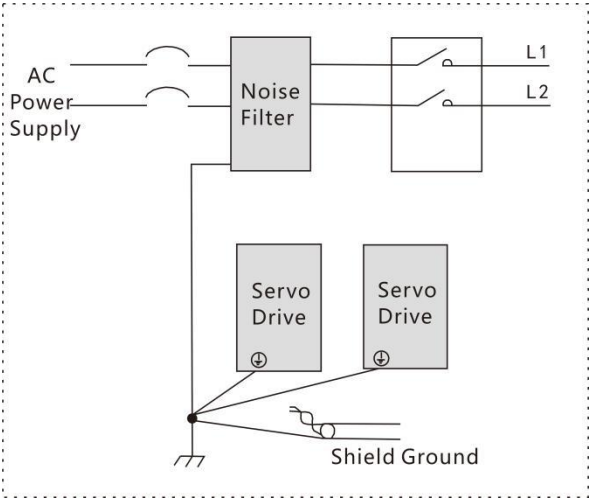

Pic 4.15 Single Point Grounding Diagram

- The ground handling of a noise filter installed in the control cabinet.

when the noise filter and servo driver are installed in the same control cabinet, it is recommended that the filter and servo driver are fixed on the same metal plate. To ensure the contact part is conductive and lapped well, and the metal plate is grounded.

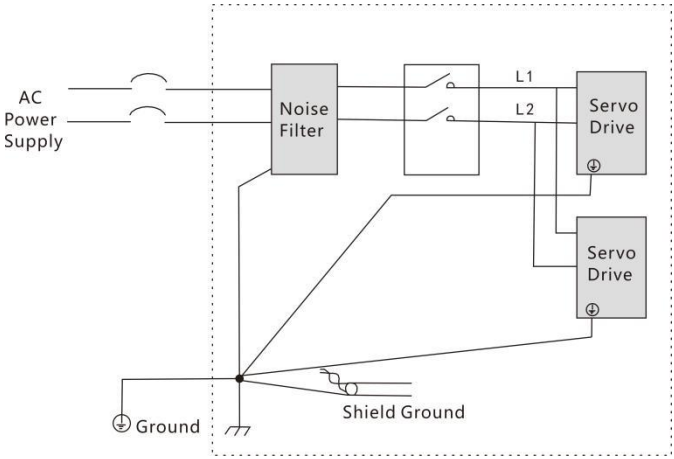

Pic 4.16 Ground Connection Handling Of Noise Filter

Chapter 5 Running Mode And Controlling Wiring

According to the command mode and operation characteristics of a servo drive, it can be divided into three operation modes: position control operation mode, speed control operation mode and torque control operation mode.

- The position control mode usually determines the displacement of the movement by the number of pulses, and the pulse frequency of the external input determines rotation speed. Because the position mode can strictly control the position and speed, it is generally used in the positioning device. It is the most popular control mode and mainly used in robot, table placement machine, carving and milling, CNC machines and so on.

- The speed control mode controls rotation speed through the given analog quantity, the given digital quantity and the given communication speed. It is mainly used in the constant-speed applications. For example, the upper computer adopts position control mode and the servo drive adopts speed control mode in application of carving and milling machines.

- The torque control mode controls torque through the given analog quantity, the given digital quantity and the given communication speed. It is mainly used in winding and unwinding devices which have strict requirements on the force of material, such as winding device or drawing fiber equipment and other tension control applications. The setting of torque should be changed at any time according to the radius of winding to ensure that the force of material will not change with the change of winding radius.

5.1 Position Control Mode

5.1.1 Position Mode Introduction

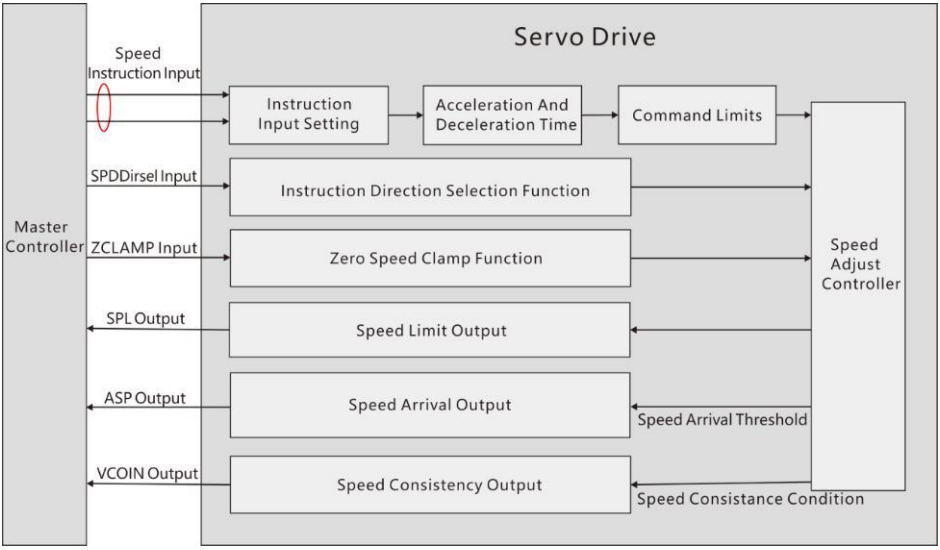

Pic 5.1 Position Mode Diagram

The main steps for position mode are as follows:

1) Correctly connect the main circuit and the power supply , as well as the motor power cable and encoder cable. After powering on, the drive panel displays "r 0" ,which means that the drive power supply and encoder wiring are correct.

2) Pressing the keys for servo JOG trial operation to confirm whether the motor can run normally.

3) To connect the pulse direction input and pulse instruction input of the CN1 terminal as well as the required DI/DO signals, such as servo enable, alarm clearance, location completion signal, etc based on the figure 5.2 as a reference.

4) Then to make some setting operations. DI/DO can be set according to actual situation.

5) For servo enable, the servo motor rotation is controlled by the position instruction from the upper computer. Firstly make the motor rotate at low speed, and confirm whether the rotation direction and electronic gear ratio are normal, then make the gain adjustment.

5.1.2 Position Mode Wiring

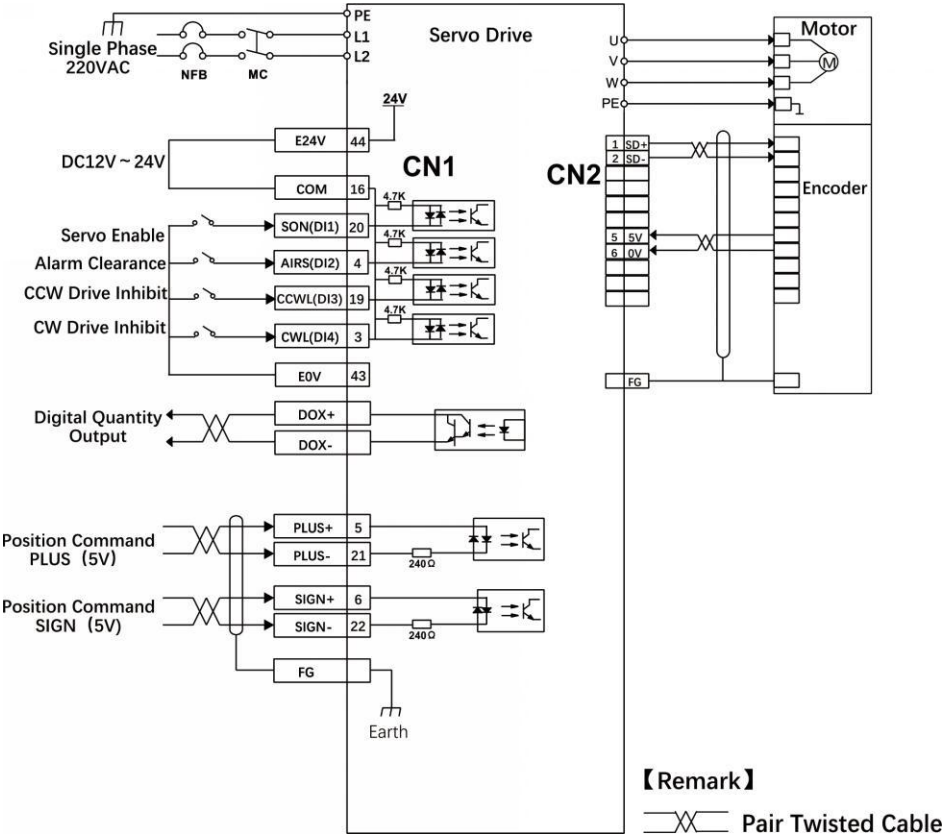

Pic 5.2 Position Mode Wiring

NOTE

◆ The voltage of the internal 24V power supply ranges 20V~28V, and maximum operating current 100mA. If use a external 24V power supply, please connect the external 24V+ to pin16(COM) and the external 0V to pin43(E0V).

◆ A power supply for DO output should be prepared by customers. The power ranges 5V~24V. The maximum allowable voltage is DC30V and current is 50mA.

5.1.3 Parameter Settings In Position Mode

- **Gain And Smooth Filter**

Parameter	Introduction	Range	Default Value
PA4	Control mode	0	0
PA9	Position Proportional Gain	1-1000	80
PA19	Position Command Smooth Filter	0-1000×0.1ms	100
PA100	Command Filter Selection	0-1	0

- **Digital Input**

Parameter	Introduction	Range	Default Value
PA11	Command pulses for each rotation	0-30000	10000
PA12	1st numerator of electronic gear for position command pulse	1-32767	0
PA13	Denominator of electronic gear for position command pulse	1-32767	10000
PA14	Input mode of position command pulse	0-3	0
PA15	reverse direction of position command pulse	0-1	0
PA59	The effective edge of command pulse	0-1	0
PA77	2nd numerator of electronic gear for position pulse	1-32767	0
PA78	3rd numerator of electronic gear for position pulse	1-32767	0
PA79	4th numerator of electronic gear for position pulse	1-32767	0
PA80	Effective level of command direction signal	0-1	0
PA81	Command pulse(PULS)signal filter	0-15	4
PA82	Command pulse(SIGN)signal filter	0-15	4

- **Digital Output(DO)**

Parameter	Introduction	Range	Default Value
PA16	Range of positioning completion	0-3000 pulses	130
PA17	Position deviation limit	0-30000×100 pulses	6000
PA18	Position deviation error	0-1	0
PA83	CWL,CCWL prohibited mode	0-1	0
PA84	Hysteresis for position completion	0-32767	65
PA85	Range for approach positioning	0-32767	6500
PA86	Hysteresis for approach positioning	0-32767	650

- **Input And Output Terminals**

Parameter	Introduction	Range	Default Value
PA55	Effective level control word for input terminals	0000-1111	0000
PA57	Effective level control word for output	0000-1111	0000
PA58	Time constant of removing jitter for IO input terminal	1-20ms	2
P3-0	Digital Input DI1 function	0-99	1
P3-1	Digital Input DI2 function	0-99	2
P3-2	Digital Input DI3 function	0-99	3
P3-3	Digital Input DI4 function	0-99	4
P3-15	Force digital input valid1	00000000-11111111	00000000
P3-16	Force digital input valid2	00000000-11111111	00000000
P3-17	Force digital input valid3	00000000-11111111	00000000
P3-20	Digital Output DO1 function	0-99	18
P3-21	Digital Output DO2 function	0-99	3
P3-22	Digital Output DO3 function	0-99	5
P3-23	Digital Output DO4 function	0-99	8

- **Position Command Introduction Of Internal Position Pr Mode**

Pr position command source creates position command. Register takes the 8 groups of parameters （P4-2，P4-3)-(P4-23，P4-24). And then can choose one of 8 groups to be position command to match with 1/O(CN1、POS0-POS2 and CTRG). As below table shows:

Command	POS2	POS1	POS0	CTRG	Parameter	Induction	Moving Speed Register
P1	0	0	0	↑	P4-2	circle(+/-30000)	P4-4 (V1)
					P4-3	pulse(+/-max cnt)	
P2	0	0	1	↑	P4-5	circle(+/-30000)	P4-7 (V2)
					P4- 6	pulse(+/-max cnt)	
P3	0	1	0	↑	P4-8	circle(+/-30000)	P4-10 (V3)
					P4-9	pulse(+/-max cnt)	
P4	0	1	1	↑	P4-11	circle(+/-30000)	P4-13 (V4)
					P4-12	pulse(+/-max cnt)	
P5	1	0	0	↑	P4-14	circle(+/-30000)	P4-16 (V5)
					P4-15	pulse(+/-max cnt)	
P6	1	0	1	↑	P4-17	circle(+/-30000)	P4-19 (V6)
					P4-18	pulse(+/-max cnt)	
P7	1	1	0	↑	P4-20	circle(+/-30000)	P4-22 (V7)
					P4-21	pulse(+/-max cnt)	
P8	1	1	1	↑	P4-23	circle(+/-30000)	P4-25 (V8)
					P4-24	pulse(+/-max cnt)	

Note:

The state of POS0-2:

0: contact break (open)

1: contact close

CTRG↑: the moment from open (0) to close (1)

Max: the command pulses of the motor in one revolution

Absolute position register is broadly applied. User can easily complete periodicity actions by the above table. For example, the position command P1=10 revolution, P2=20 revolution. P1 should be followed by P2.

Differences between P1 and P2 as below:

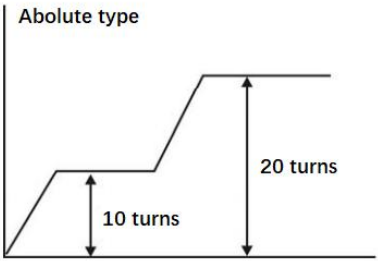

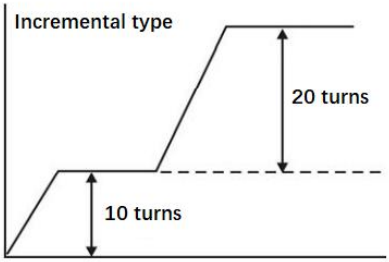

5.2 Speed Control Mode Wiring

5.2.1 Introduction

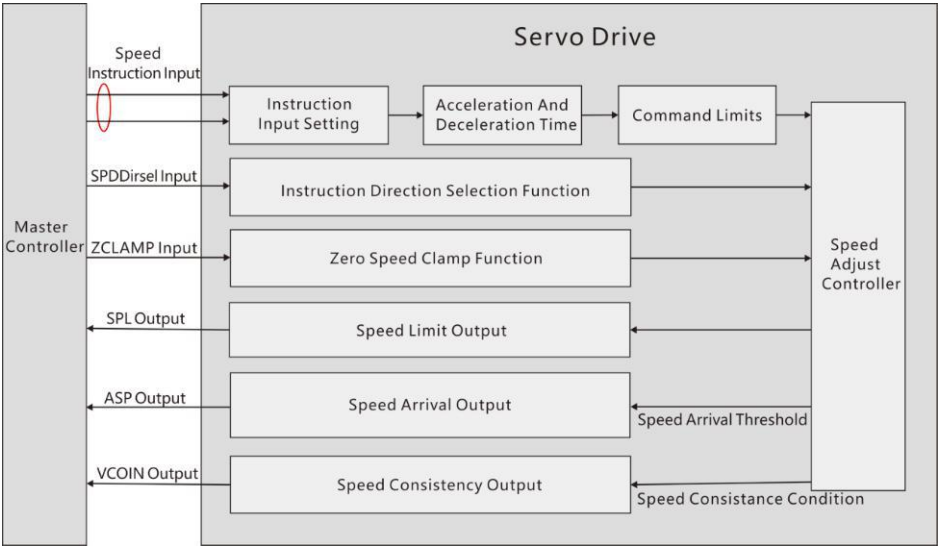

Pic 5.3 Speed Control Mode

The main steps to use the speed control mode are as follows:

1) correctly connect the servo main circuit and the power supply of the controller, as well as the motor cable and encoder cable. The servo panel displays”r 0” after powering on which means that the servo power supply and encoder connection are correct.

2)Operate the servo JOG trial running mode through the panel keys to confirm whether the motor can run normally.

3) To connect the required DI/DO signals in CN1 terminal, such as servo enable, alarm clearance, positioning completion signal, etc referring figure 5.4.

4) To operate speed mode related setting. DI/DO are used to set according to your application.

5) To make the servo enabled and the servo motor rotation is controlled by the position instruction issued by the upper computer. First make the motor rotate at low speed, and confirm whether the rotation direction and electronic gear ratio are normal, then make the gain adjustment.

5.2.2 Speed Mode Wiring

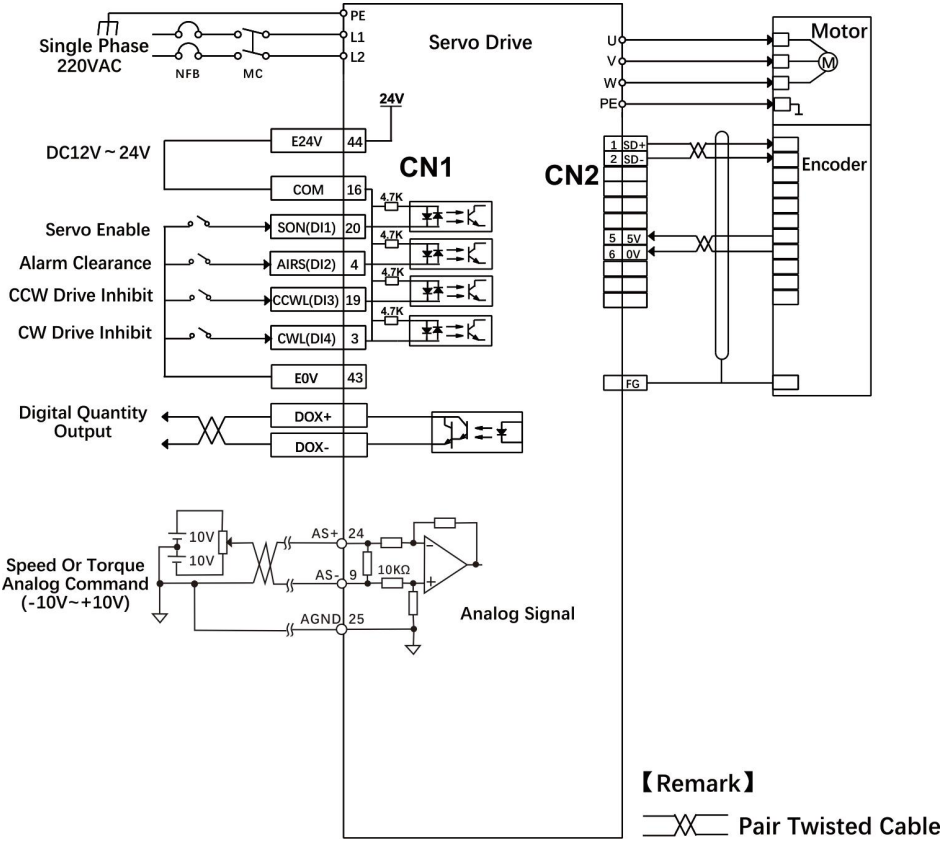

Pic5.4 Speed Mode Wiring

5.2.3 Parameter Settings In Speed Mode

Parameter	Introduction	Range	Default Value
PA4	Control Mode	1	0
PA5	Speed Proportional Gain	5-2000Hz	150
PA6	Speed Integral Constant	1-1000ms	75
PA22	Internal And External Speed Instruction Selection	0-5	0
PA24	Internal Speed 1	-6000-6000r/min	100
PA25	Internal Speed 2	-6000-6000r/min	500
PA26	Internal Speed 3	-6000-6000r/min	1000
PA27	Internal Speed4	-6000-6000r/min	2000
PA28	Arrival Speed	0-3000r/min	3000
PA40	Acceleration Time Constant	1-10000ms	100
PA41	Deceleration Time Constant	1-10000ms	100
PA42	S Type Acceleration And Deceleration Time Constant	0-1000ms	0
PA43	Gain Of Analog Speed Command	10-3000r/min/v	300
PA44	Direction Of Analog Speed Command	0-1	0
PA45	Zero Offset Compensation Of Analog Speed Command	-5000-5000	0
PA46	Filter Of Analog Speed Command	1-300Hz	300
PA75	Zero-speed Detection Point	0-1000r/min	10
PA76	The Setting Value For Speed Consistent	0-1000r/min	10
PA87	Hysteresis Of Arrival Speed	0-5000r/min	30
PA88	Polarity Of Arrival Speed	0-1	0
PA92	Hysteresis For Zero Speed Detection	0-1000r/min	5

5.3 Torque Control Mode

5.3.1 Introduction

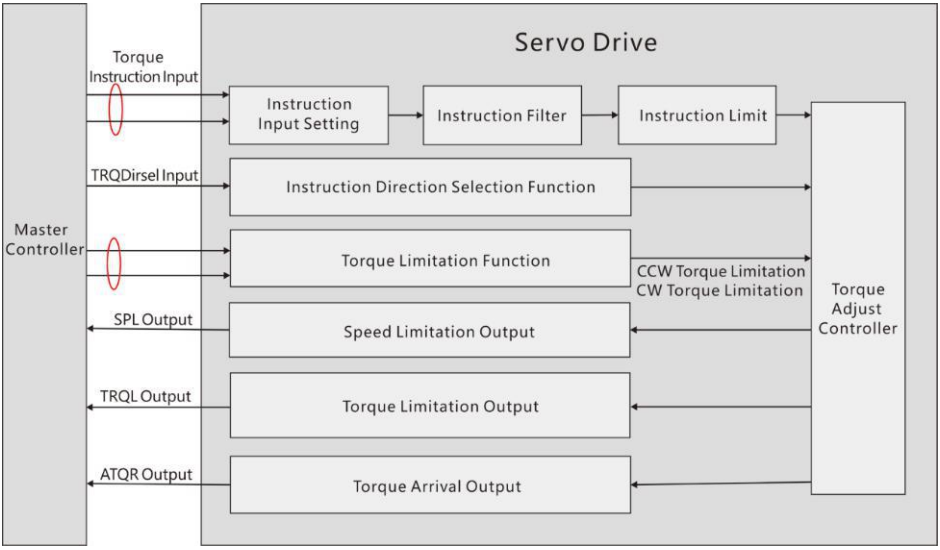

Pic 5.5 Torque Control Mode

The main steps to use the speed control mode are as follows:

1) Correctly connect the servo main circuit and the power supply of the controller, as well as the motor cable and encoder cable. The servo panel displays"r 0" after powering on which means that the servo power supply and encoder connection are correct.

2) Operate the servo JOG trial running mode through the panel keys to confirm whether the motor can run normally.

3) To connect the required DI/DO signals in CN1 terminal, such as servo enable, alarm clearance, positioning completion signal, etc referring figure 5.4.

4) To operate torque mode related setting. DI/DO are used to set according to your application.

5) To make the servo enabled and the servo motor rotation is controlled by the position instruction issued by the upper computer. First make the motor rotate at low speed, and confirm whether the rotation direction and electronic gear ratio are normal, then make the gain adjustment.

5.3.2 Torque Mode Wiring

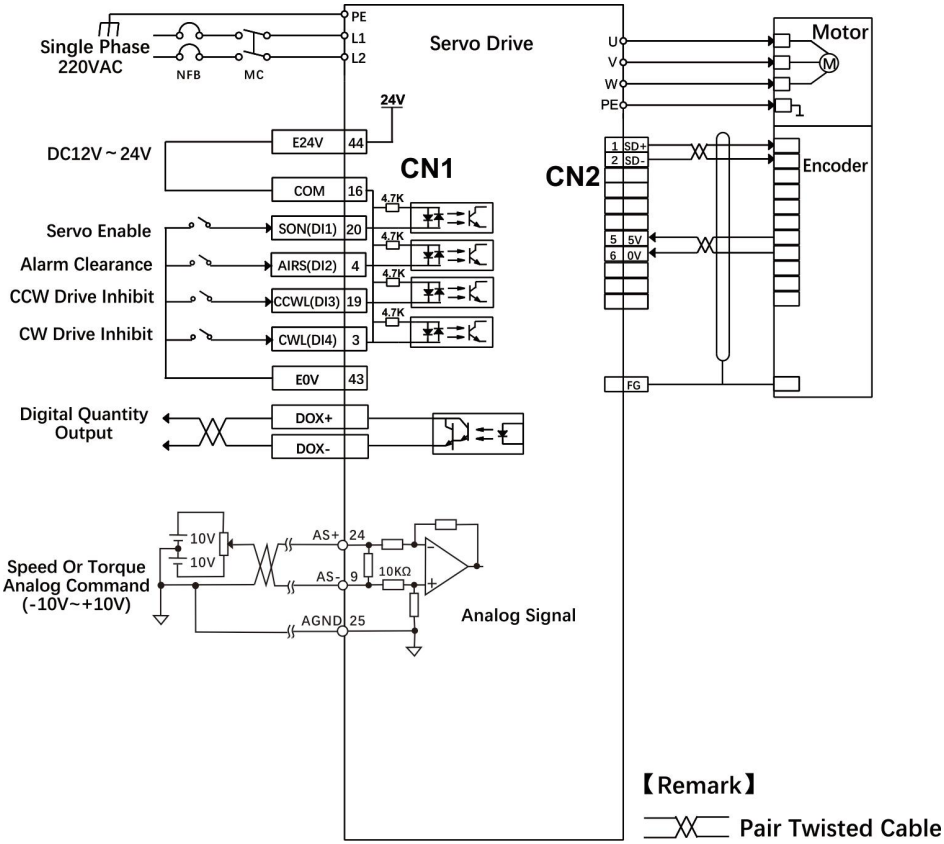

Pic5.6 Torque Mode Wiring

5.3.3 Parameter Settings In Torque Mode

Parameter	Introduction	Range	Default Value
PA4	Control mode	2	0
PA29	Gain of analog torque command	Set by requirement	30
PA32	Selection for internal and external torque command	0-2	0
PA33	Direction of analog torque command	0	0
PA39	Zero offset compensation of analog torque command	0	0
PA50	Speed limit in torque control mode	Set by requirement	Rated Speed
PA64	Internal torque 1	-300-300	0
PA65	Internal torque 2	-300-300	0
PA66	Internal torque 3	-300-300	0
PA67	Internal torque 4	-300-300	0
PA83	Inhibition method	0-1	0
PA89	Arrival torque	-300%-300%	100
PA90	Hysteresis of arrival torque	0%-300%	5
PA91	Polarity of arrival torque	0-1	0

5.4 Origin Regression Function And Relevant Parameters Introduction

5.4.1 Relevant Parameter Settings

Parameter	Introduction	Value	Default Value
P4-32	Origin detector type or search direction setting	0-5	0
P4-33	Set the model of short distance movement to the origin	0-2	0
P4-34	Origin trigger start mode	0-2	0
P4-35	Origin stop mode setting	0-1	0
P4-36	The first stage of high speed origin regression speed setting	1-2000 r/min	1000
P4-37	The second stage of low speed origin regression speed setting	1-500 r/min	50
P4-38	Cycles of origin regression offset	+/-30000	0
P4-39	Pulses of origin regression offset	+/-max cnt	0

5.4.2 Origin Regression Mode Introduction(Must be in internal position mode)

A. Origin trigger start mode(P4-34)

The origin trigger start mode is divide into two kinds of origin regression function. One is automatic performing and another is contacting trigger. Details as below:

P4-34=0: close origin regression function. When set P4-34=0, the origin regression function can not work not matter what its setting value is.

P4-34=1: when the power is on, it will execute origin regression automatically. The function is available one when the power supply and servo on,which means it is unnecessary to repeat the operation when the servo works. It can save one input contact used to perform the origin regression.

P4-34=2: It triggers origin regression function through the input contact SHOM.
One of registers which are input pin function planning register must be set to SHOM trigger input function. The SHOM contact can be triggered at any time during the servo working and the function of origin regression can be performed.

B. Origin trigger start mode(P4-32)

The origin detector can use either the left limit switch or the right limit switch as the reference point for the origin. Or it can use extra detectors such as near type or light-gate type switch) as the reference. The Z pulse can be also set as a reference point when the servo motor moves in only one revolution.

P4-32=0: CW direction finds the origin and use CCWL limit as a rough reference point. When completing origin positioning, CCWL is limit input function. The subsequent retrigger will occur limit warning. When using limit input point as a rough reference point, recommended to set Z pulse(P4-33) as the precise mechanical origin.

P4-32=1: CCW direction finds the origin point and use CWL limit as a rough reference point. CWL is limit input function.The subsequent retrigger will occur limit warning. When using limit input point as a rough reference point, recommended to set Z pulse(P4-33) as the precise mechanical origin.

P4-32=2: CW direction finds the origin point and use ORGP(external detector input point) as the origin point reference. Then Z pulse of return search(P4-33=0) or do not return search(P4-33=1) can be set as the precise mechanical origin point. If do not use Z pulse as the mechanical origin point, the positive edge of ORGP can be also set as the mechanical origin point(P4-33=2).

P4-32=3: CCW direction finds the origin point and use ORGP(external detector input point) as the origin point reference. Then Z pulse of return search(P4-33=0) or do not return search(P4-33=1) can be set as the precise mechanical origin point. If do not use Z pulse as the mechanical origin point, the positive edge of ORGP can be also set as the mechanical origin point(P4-33=2).

P4-32=4: CW direction finds Z pulse origin point directly. This function is usually used for servo motor motion control in only one rotation range and now any detector switches are unnecessary connected.

P4-32=5: CCW direction finds Z pulse origin point directly. This function is usually used for servo motor motion control in only one rotation range and now any detector switches are unnecessary connected.

C. Movement mode setting of short distance to the origin (P4-33)

P4-33=0: after the origin point has been found, the servo motor returns at the second stage of speed to search the nearest Z pulse as the mechanical origin point.

P4-33=1: after the origin point has been found, the servo motor changes to the second stage of speed to keep searching the nearest Z pulse as the mechanical origin.

P4-33=2: the rising edge of ORGP which was found is set as the mechanical origin point and stops according to deceleration, which is applied to P4-32=2 or 3. Or when found Z pulse, it stops according to deceleration, which is applied to P4-32=4 or 5. And the value of P4-32 for detecting origin detection is only applicable to 2 or 3. Under Z pulse origin point detecting, P4-32 is only applicable to 4 or Z pulse.

D. The mode setting of origin point stops (P4-35)

P4-35=0: after the origin detection has been completed, the motor slows down and is pulled back to the origin point. The motor slows down and stops when it gets the signal of origin detection at the second stage of speed.Then it moves back to the mechanical original position.

P4-35=1: after the origin detection has been completed, the motor decelerates and stops in the forward direction. The motor slows down and stops when it get the signal of origin detection at the second stage of speed. Then position overrun is no longer modified and the mechanical original position would not change even there are different position overruns.

5.5 Pre-operational Inspection

Before connecting the load, the motor should be run for checking.

- Check and ensure before running:

1) There is no obvious damage to the appearance of the servo drive.
2) Wiring terminals are insulated.
3) There are no conductive objects, such as screws or metal plates, combustible objects inside the drive, and no conductive objects at the connection port.
4) Do not place the servo drive or a external brake resistor on combustibles.
5) Please wire correctly.

- Driver power supply, auxiliary power supply, grounding end and other wiring should be wired correctly. Each control signal cable connection should be correct. Each limit switch, protection signal have been correctly connected.

1) Enabled switch in OFF state.
2) Cut off power supply circuit and stop alarm circuit to maintain access ope.
3) Servo driver applied voltage reference should be correct.

- Power the servo drive when the controller does not send a running command signal. Check and guarantee:

1) The servo motor can turn normally without vibration or operating sound phenomenon.
2) All parameters are set correctly, according to different mechanical characteristics and please do not over-set extreme parameters.
3) Bus voltage indicator lamp and digital tube display are normal.

Chapter 6 Operation And Display

6.1 Drive Panel Introduction

6.1.1 Front Panel

The panel consists of 5 digital LED and 4 buttons including ↑、↓、←、SET to display all system status and set parameters. The operation is hierarchical.← button indicates “back” and SET button indicates “forward” while it also has the meaning of “Enter” and ← button also has the meaning of “Cancel” and “Exit”. ↑ button indicates “Increasing ” and ↓ button indicates “decreasing”. If you press the ↑ button or ↓ button and maintain it, you would get a duplicate result and stay longer, the repetition rate is higher.

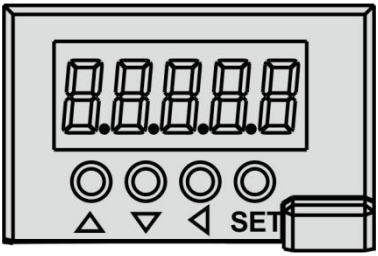

Pic 6.1 Drive Panel Display

6.1.2 Front Keys Introduction

Key	Name	Function
▲	Increasing	Increase sequence number or value;Press and hold to keep increasing.
▼	Reducing	Decrease sequence number or value;Press and hold to keep decreasing.
◀	Exit	Menu exit or cancel the operation.
SET	Confirm	Menu entered or confirm the operation.

6.2 Main Menu

The first layer is the main menu and has 8 operating modes in total. Press ↑or ↓button to change the operation mode. Then press SET button to enter into the second layer and executes a concrete operation. Press ← button returns to the main menu from the second layer.

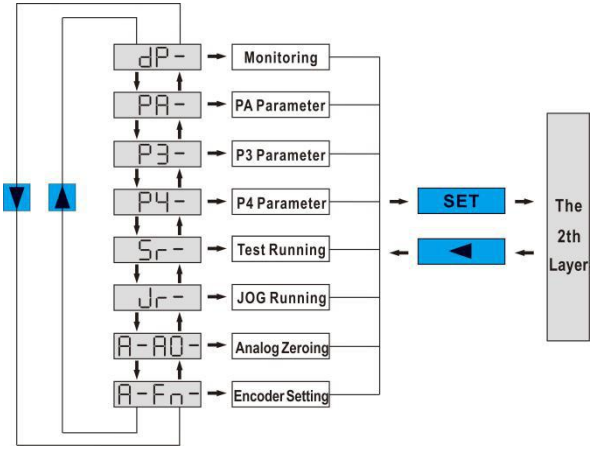

Pic6.2 Main Menu

6.3 Steps To Set Parameters

Select “PA-” and press SET button to enter the status of parameter setting mode. And use ↑ or ↓ to choose parameters and then press SET button to display the parameter value. You can modify the value with ↑ or ↓ key. Press ↑ key or ↓ key once, the parameter value increases or decreases by 1. Pressing and holding ↑ or ↓ key can make the value increased or decreased continuously. After modifying the value of the parameter,please press SET button and when the LED flashes two times, it means the setting is completed . Finally please recharge, then the new parameter is effective.

6.4 Status Monitoring

In the first layer,select “DP--” and press SET button to enter into monitoring mode. There are 23 displays in total. Users select the desired display mode with ↑ or ↓ key, and then press SET button to enter into the specific states.

Status	Operation	Example	Definition
P-SPd	SET	r 1000	Motor speed:1000r / min
P-PoS		04580	The current position:124580
P-PoS.		P. 12	
P-CPo		C4581	Position command:124581
P-CPo.		C. 12	
P-EPo		E 4	Position deviation:4 pulses
P-EPo.		E. 0	
P-trq		t 0.70	Motor torque 70%
P- I		I 2.3	Motor current 2.3A
P-Cnt		Cnt 0	Control mode 0：position control
P- CS		r. 500	In speed mode,analog input speed: 500 r/min
P- Ct		t 0.50	In torque mode,analog input torque:50%
P-APo		A3265	Absolute rotor position:3265
P-APo.		A. 0	
P- In		n IIII	Input terminal
P-oUt		oUtIII	Output terminal
P-UdC		UC336	Line voltage:336V
P-Err		Err 4	No.4 alarm

Status	Operation	Example	Definition
P- rL		rL-on	Relay open
		rL.-oF	Relay off
		rL-Er	Relay alarming
P- rn		rn - on	Main circuit working normally
		rn.-oF	Main circuit uncharged
		rn-CH	Main circuit not enabled
		rn-Er	Main circuit alarming
P- US		U-on	Line voltage normally
		U-.LoU	Line voltage too low
		U-Err	Line voltage alarming
P- AS		43210	Absolute motor position876543210
P- AS.		A.8765	

6.5 Analog Quantity Zeroing Adjustment

Using this function,the servo drive can check analog zero offset automatically and write the offset value into parameter PA39 or PA45. The operation has saved offset parameter to EEPROM, so it is unnecessary to write parameters again.

Firstly choose analog zero adjustment mode “A-A0” and press SET key to enter into the second layer. Select speed analog zeroing “A-SPd” or torque analog zeroing “A-Trq” and then keep pressing SET key for more than 3s. When it displays “donE”, the activation is completed.

6.6 Encoder Selection

Select "F-res" to reset the encoder and make the encoder multi-turn information zeroing. By setting P3-36 parameter , the single-turn information can be cleared to achieve the purpose of setting the original point. Select" F-clr" to clear the encoder NO. 53 alarm caused by battery power down. After long press SET key for more than 3 seconds and show "donE", the operation

is activate. After that, pressing ◀ key to return to the upper menu.

6.7 How To Reset Default Parameters

To recover default parameters when:

- The parameters are scrambled and the system can not work properly.

The steps to recover default parameters as follow:

1. Please connect the motor with the driver and power on. The driver will automatically read the motor parameters and match the motor model.
2. Set password (PA0) to 385.
3. Do the followings:

Press the ◀ key to return to the main menu and to select "PA-"with ↑ or ↓ key. Press the **SET** key to enter into the second layer and press the ↑ or ↓ key to make PA=0.Then press the **SET** key to enter into the third layer and set PA0 =385, pressing the **SET** key to save it. Next, press the ◀ key to return to the "PA-" and set the PA1=DEF-. Long press the **SET** key for 5 seconds and after the LED indicator lights flicker several times, the operation is completed Finally, it will work after repower on.

Chapter 7 Parameters

7.1 PA Group

No.	Name	Function	Rang	Default Value
0	Password	1. User code:315. 2. Motor model code:385.	0-9999	315
1	Motor selection	The parameter is read-only and can not be modified. The driver automatically identifies the motor model.	40-80	Table 7-1
2	Software version	The software version can be read but can't be modified.		

Table7-1

Drive	P100S-40	P100S-75
Motor	40-00130	80-01330
	40-00330	80-02430
	60-00630	80-03230
	60-01330	--
	60-01930	--
	80-01330	--

No.	Name	Function	Rang	Default Value
3	Initial display status	0:Display motor speed. 1:Display the current position is 5-bit low. 2:Display the current position is 5-bit high. 3:Display position command. (command pulse accumulation) is 5-bit low. 4:Display position command. (command pulse accumulation) is 5-bit high. 5:Display position deviation is 5-bit low. 6:Display position deviation is 5-bit high. 7:Display motor torque. 8:Display motor current. 9:Display control mode. 10:Display temperature. 11:Display speed command.. 12:Display torque command. 13:Display absolute position of the rotor in a roll is 5-bit low. 14:Display absolute position of the rotor in a roll is 5-bit high. 15:Display input terminal state. 16:Display output terminal state. 17:Display encoder input signal. 18:Display voltage value of main line of main circuit. 19:Display alarming code. 20:Display logic chip version number. 21:Display the actuation state of the relay. 22:Display external voltage state. 23:Display external voltage state. 24:Absolute position 5-bit low. 25: Absolute position 5-bit high.	0-25	0

No.	Name	Function	Rang	Default Value
4	Control mode selection	To set control method: 0: position control mode 1: speed control mode 2: torque control mode 3:position + speed control mode 4:position + torque control mode 5:speed + torque control mode 6:encoder zeroing mode	0-6	0
5	Proportional gain of speed loop	1.Set the proportional gain of speed loop. 2.The value is bigger, the gain is higher and rigidity is stronger. The parameter value is set according to your exact servo driving system model and the load. Generally, the greater the load inertia, the bigger the value. 3.Please set a little high value if the system condition does not generate oscillation.	5-2000 Hz	150
6	Speed integral constant	1.To set the integral time constant of the speed loop regulator. 2.The value is smaller, the integral speed is faster and the servo rigidity is stronger.But if it is too small, it will happen over controlling.	1-1000 ms	75
7	Torque filter	1.To set the characters of torque command filter. 2.To suppress resonance generated by torque. 3.The value is smaller, the cut-off frequency is lower and vibration with noise generated by the motor is less. If the load inertia is great, reducing the setting value is recommended. If the value is too small, it would lead to low response, which would result in shaking. 4.The value is bigger, the cut-off frequency is higher and the response frequency is quicker. If	20-500%	100

		you need higher torque response frequency, it is recommended to increase the setting value.		
8	Speed detection filter	1. To set the characters of speed detection filter. 2. The value is smaller, the cut-off frequency is lower and noise from the motor is smaller. If the load inertia is great, reducing the setting value is recommended. If the value is too small, it would lead to low response, which would result in shaking. 3. The value is bigger, the cut-off frequency is higher and the response frequency is quicker. If you need higher torque response frequency, it is recommended to increase the setting value.	20-500%	100
9	Proportional gain of position loop	1.To set the proportional gain of position loop . 2.The value is bigger, the gain is higher and its rigidity is stronger. So the position lag is smaller under the same frequency command pulse condition. But if it is too big, it will happen oscillation. 3.The parameter value is set according to your exact servo driving system model and the load.	1-1000	80
11	Command pulses of each motor revolution	1.To set command pulses of each motor revolution. 2.When it is set to 0, PA12(numerator of electronic gear for position command pulses), PA13(denominator of electronic gear for position command pulses) are valid.	0-30000	10000

<table>
<tr>
<td>12</td>
<td>1st numerator of electronic gear for position command pulse</td>
<td>1.Set the electric gear ratio for position command pulse.
2.In position control mode,it is convenient to match all kinds of pulse source through set the parameter PA12 and PA13, which helps to reach ideal control resolution(angle/pulse).
3. P×G=N×C×4
P: pulses of input command; G:electric gear ratio; N:numbers of motor rotation ; C:solutions of photoelectric encoder in per rotation, the default value is 2500.
4.For example, input command pulse P is 6000, servo motor rotate a roll:
G=(N×C×4)/P=(1×2500×4)/6000=5/3, So PA12 should be set to 5, PA13 should be set to 3.
5.The numerator of electronic gear for command pulse is decided by Gear1 and Gear2. The denominator is decided by PA13. The details as following:
<table>
<tr><th colspan="2">DI Signal</th><th rowspan="2">Denominator</th></tr>
<tr><th>Gear 2</th><th>Gear 1</th></tr>
<tr><td>0</td><td>0</td><td>1st Numerator(PA12)</td></tr>
<tr><td>0</td><td>1</td><td>2nd Numerator(PA77)</td></tr>
<tr><td>1</td><td>0</td><td>3rd Numerator(PA78)</td></tr>
<tr><td>1</td><td>1</td><td>4th Numerator(PA79)</td></tr>
</table>
Remark: 0=OFF, 1=ON.</td>
<td>0-32767</td>
<td>0</td>
</tr>
<tr>
<td>13</td>
<td>Denominator of position command pulse</td>
<td>Refers to parameter PA12.</td>
<td>1-32767</td>
<td>10000</td>
</tr>
</table>

No.	Name	Function	Rang	Default Value
14	Input mode of position command pulse	1.Set the input mode of position command pulse. 2.To set one of 4 input modes: 0: Pulse+Direction. 1: CCW pulse/CW pulse. 2: phase A and phase B orthogonal input. 3: Internal position input. Remark: CCW: observe from the motor axial direction. It defines CCW in counter clock wise and CW in clock wise.	0-3	0
15	Direction of command pulses	0:Normal direction. 1:Reverse position command pulse.	0-1	0
16	The rang of positioning completion	1.Setting the pulse range of positioning completion in position control mode. 2.The drive judges whether it has finished positioning completion based on this parameter. When the rest pulses in position deviation counter are less than or equal with the setting value, the COIN（positioning completion) of digital output(DO) is ON, or else OFF	0-30000 pulses	130
17	Detection of over-travel range	1.Set alarming detection range of over travel.. 2.In position control mode, if the value in position deviation counter is over than the setting value, the drive will alarm.	0-30000× 100 pulses	6000
18	Invalid over-travel error	Set to: 0: The alarming detection of over travel is valid. 1: The alarming detection of over travel is invalid, and it stops detecting the error .	0-1	0

No.	Name	Function	Rang	Default Value
19	Position command smooth filter	1.To filter the instruction pulse with exponential acceleration and deceleration, and the value represents the time constant. 2.The filter does not lose input pulses, but would occur command delay . 3.The filter applies in (1. PC controller without acceleration and deceleration function. (2. The electronic gear frequency is a little big(>10). (3.The command frequency is a little low. (4.When the motor runs, there are step jumps and unsmooth. 4.When set to value"0", the filter does not work.	0-1000× 0.1ms	100
20	Invalid input of drive inhibition	To set: 0: CCW drive inhibition or CW drive inhibition is effective. If the switch of CCW drive inhibition is ON, CCW drive is permitted.If the switch of CCW drive inhibition is OFF, CCW torque keeps 0.The same as CW drive inhibition. If both CCW and CW drive inhibition are OFF, it will come to error alarms of drive inhibition input. 1: Cancel CCW or CW drive inhibition. No matter what state of the switch of CCW or CW drive inhibition is, CCW or CW drive is allowed.Meanwhile,if the switches of CCW and CW drive inhibition are OFF, it will still not alarm..	0-1	1
21	JOG speed	Set the running speed of JOG operating.	0-6000 r/min	100

<table>
<tr><th>No.</th><th>Name</th><th>Function</th><th>Rang</th><th>Default Value</th></tr>
<tr><td>22</td><td>The source of speed command</td><td>In speed control mode, it sets the source of speed command. It means:
0: Analog Terminal AS+,AS- input analog speed command.
1:Internal speed command is decided by SP1 and SP2 of digital input(DI):
<table>
<tr><th colspan="2">DI Signal</th><th rowspan="2">Speed Command</th></tr>
<tr><th>SP2</th><th>SP1</th></tr>
<tr><td>0</td><td>0</td><td>Internal Speed1(PA24)</td></tr>
<tr><td>0</td><td>1</td><td>Internal Speed2(PA25)</td></tr>
<tr><td>1</td><td>0</td><td>Internal Speed2(PA26)</td></tr>
<tr><td>1</td><td>1</td><td>Internal Speed2(PA27)</td></tr>
</table>
Note: 1=ON, 0=OFF.
2: Analog speed command+internal speed command:
<table>
<tr><th colspan="2">DI Signal</th><th rowspan="2">Speed Command</th></tr>
<tr><th>SP2</th><th>SP1</th></tr>
<tr><td>0</td><td>0</td><td>Analog Speed Command</td></tr>
<tr><td>0</td><td>1</td><td>Internal Speed2(PA25)</td></tr>
<tr><td>1</td><td>0</td><td>Internal Speed2(PA26)</td></tr>
<tr><td>1</td><td>1</td><td>Internal Speed2(PA27)</td></tr>
</table>
3: JOG speed command, if carries out JOG operation,it is needed to set.
4: Keyboard speed c ommand, if carries out Sr operation,it needs to set the parameter.
5:IO terminal controls JOG operation.</td><td>0-5</td><td>0</td></tr>
<tr><td>23</td><td>Highest speed limit</td><td>Set the highest speed of the ac motor.
1.It doesn’t matter with rotating direction.
2.If the setting value is beyond of rated speed, the real highest speed is set as the rated speed.</td><td>0-6000r/min</td><td>5000</td></tr>
</table>

<table>
<tr><th>No.</th><th>Name</th><th>Function</th><th>Rang</th><th>Default Value</th></tr>
<tr><td>24</td><td>Internal speed selection 1</td><td>1.Set the internal speed 1.
2.In speed control mode(PA22=0), when SC1 and SC2 are OFF, internal speed 1 is the speed command.</td><td>-6000-6000 r/min</td><td>100</td></tr>
<tr><td>25</td><td>Internal speed selection 2</td><td>1.Set the internal speed 2.
2.In speed control mode(PA22=0), when SC1 is ON,while SC2 is OFF, internal speed 2 is the speed command.</td><td>-6000-6000 r/min</td><td>500</td></tr>
<tr><td>26</td><td>Internal speed selection 3</td><td>1.Set the internal speed 3.
2.In speed control mode(PA22=0), when SC1 is OFF,while SC2 is ON, internal speed 3 is the speed command.</td><td>-6000-6000 r/min</td><td>1000</td></tr>
<tr><td>27</td><td>Internal speed selection 4</td><td>1.Set the internal speed 4.
2.In speed control mode(PA22=0), when SC1 and SC2 are ON, internal speed 4 is the speed command.</td><td>-6000-6000 r/min</td><td>2000</td></tr>
<tr><td>28</td><td>Speed arrival</td><td>1.Set the detection timing of the speed arrival output. When the servomotor speed surpasses this parameter, the digital output (DO) ASP (arrival speed) is ON, otherwise is OFF.
2.The comparator has hysteresis function set by PA87. Detection is associated with 10 r/min hysteresis.
 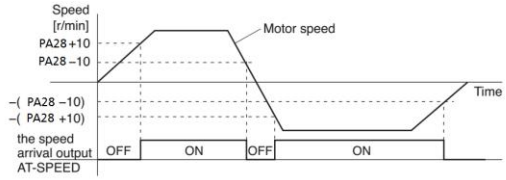

3.It also has the polarity setting function:
<table>
<tr><th>PA88</th><th>PA28</th><th>Comparator</th></tr>
<tr><td>0</td><td>＞0</td><td>No direction for speed</td></tr>
<tr><td rowspan="2">1</td><td>＞0</td><td>Only detect CCW speed</td></tr>
<tr><td>＞0</td><td>Only detect CW speed</td></tr>
</table></td><td>0-3000 r/min</td><td>3000</td></tr>
</table>

<table>
<tr><td>29</td><td>Gain of analog quantity torque command</td><td>1.Set the proportion for input voltage of analog torque and the actual motor running torque.
2. The setting value unit is 0.1v/100%.
3. The default value is 30, corresponding to 3v/100%, while it means if the input voltage is 3V, it would generate 100% rated torque.</td><td>10-100 (0.1v/ 100%)</td><td>30</td></tr>
<tr><td>30</td><td>The alarm value of torque overload</td><td>1.The value is the percentage of rated torque. The limit is independent to direction and CW or CCW direction is protected.
2.When PA31＞9, motor torque＞PA30 and duration ＞PA31, the drive alarms and the code is Err-29. The motor stops working. It must repower on after clearing errors.</td><td>1-300</td><td>300</td></tr>
<tr><td>31</td><td>The detection time for torque overload</td><td>1.The detection time for torque overload, unit:ms. Detection time=PA31×0.1.
2.When set to 0~9, the function of torque overload alarming is prohibited. Generally,the value is set as 0.</td><td>0-32767</td><td>0</td></tr>
<tr><td>32</td><td>The source of torque command</td><td>In torque control mode, it sets the source of torque command. It means:
0:Analog torque command, it inputs by analog terminal AS+ and AS-.
1:Internal torque command, it is decided by TRO1 and TRQ2 of digital input(DI):
<table>
<tr><th colspan="2">DI Signal</th><th rowspan="2">Torque Command</th></tr>
<tr><th>TRQ2</th><th>TRQ1</th></tr>
<tr><td>0</td><td>0</td><td>Internal Torque1(PA64)</td></tr>
<tr><td>0</td><td>1</td><td>Internal Torque2(PA65)</td></tr>
<tr><td>1</td><td>0</td><td>Internal Torque3(PA66)</td></tr>
<tr><td>1</td><td>1</td><td>Internal Torque4(PA67)</td></tr>
</table>
Note: 0=OFF, 1=ON</td><td>0-1</td><td>0</td></tr>
</table>

<table>
<tr><td></td><td></td><td>2:Analog torque command+internal torque command:
<table>
<tr><th colspan="2">DI Signal</th><th rowspan="2">Torque Command</th></tr>
<tr><th>TRQ2</th><th>TRQ1</th></tr>
<tr><td>0</td><td>0</td><td>Analog Torque Command</td></tr>
<tr><td>0</td><td>1</td><td>Internal Torque2(PA65)</td></tr>
<tr><td>1</td><td>0</td><td>Internal Torque3(PA66)</td></tr>
<tr><td>1</td><td>1</td><td>Internal Torque4(PA67)</td></tr>
</table></td><td></td><td></td></tr>
<tr><td>33</td><td>The input direction of analog torque command</td><td>Reverse the input polarity of analog torque.</td><td>0-1</td><td>0</td></tr>
<tr><td>34</td><td>Internal CCW torque limit</td><td>1.The setting value is the percentage of rated torque.For example,it is set to 2 times of the rated torque, the value is 200.
2. At any time, this restriction is valid.
3. If the setting value is over than the max overload capacity, the actual torque limit is the max overload capacity that is permitted.</td><td>0-300%</td><td>300</td></tr>
<tr><td>35</td><td>Internal CW torque limit</td><td>1.The setting value is the percentage of rated torque.For example,it is set to 2 times of the rated torque, the value is 200.
2. At any time, this restriction is valid.
3. If the setting value is over than the max overload capacity, the actual torque limit is the max overload capacity that is permitted.</td><td>-300-0%</td><td>-300</td></tr>
<tr><td>36</td><td>External CCW torque limit</td><td>1.The setting value is the percentage of rated torque, for example, it is set to 1 time of rated torque, the value is 100.
2.Only when the input terminal(FIL) of CCW torque limit is ON is it valid.
3.When the limit is valid, the actual torque limit is</td><td>0-300%</td><td>100</td></tr>
</table>

		the Minimum value of max overload capacity ,internal CCW torque limit and external CCW torque limit.		
37	External CW torque limit	Set external torque limit of the motor CW direction. 1.The setting value is the percentage of rated torque, for example, it is set to 1 time of rated torque, the value is -100. 2.Only when the input terminal(RIL) of CW torque limit is ON is it valid. 3.When the limit is valid, the actual torque limit is the Minimum value of max overload capacity ,internal CCW torque limit and external CCW torque limit.	-300-0%	-100
38	Temperature alarm	Set drive temperature up to max limitation.	200-1350	
39	Zero offset compensation of analog torque command	Make an offset adjustment for analog torque command with this parameter.	-2000-2000	0
40	Acceleration time constant	The value means the motor of acceleration time from 0r/min to 1000r/min. 1.Linear acceleration and deceleration characteristics. 2.It only applies in speed control mode and internal position control mode, and other modes are invalid..	1-10000ms	100
41	Deceleration time constant	The value means the deceleration time of the motor from 1000r/min to 0r/min. 1.Linear acceleration and deceleration characteristics. 2.It only applies in speed control mode and internal position control mode, while other modes are invalid. 3.This parameter should be set to 0 if the drive is used in combination with an external position loop.	1-10000 ms	100

No.	Name	Function	Rang	Default Value
42	S type acceleration and deceleration time constant	It makes the motor start and stop working stably and sets a part of time of S type acceleration and deceleration curve.	0-1000ms	0
43	Gain of analog speed command	Set the proportion for analog speed input voltage and actual motor running speed.	10-3000 r/min/v	300
44	Direction of analog speed command	Reverse the input polarity of analog speed. 1. Set to 0 and analog speed command is positive,the speed direction is CCW. 2. Set to 1 and analog speed command is positive,the speed direction is CW.	0-1	0
45	Zero offset compensation of analog speed command	Make an offset adjustment for analog speed command with this parameter.	-5000-5000	0
46	Filter of analog speed command	1.The input low pass filter of analog speed 2.The setting value is bigger, the response frequency is quicker to speed input analog quantity and the influence of signal noise is louder.	1-1000 Hz	300
47	The setting of mechanical brake when the motor stops	1.It defines the delay time from BRK=ON and BRK=OFF to the motor current cutting off when the motor stops rotating. 2.To avoid a small displacement or working drop of the motor, the parameter should not be less than the delay time of mechanical braking.	0-200×10ms	0

No.	Name	Function	Rang	Default Value
48	The setting of mechanical brake when the motor rotates	1.It defines the delay time from the motor current cutting off to BRK=ON and BRK=OFF when the motor rotates. 2.To avoid a damage to the brake, the parameter makes the motor slow down and then makes the mechanical brake work. 3. The actual action time is the time it takes to drop from PA48 or current motor speed to PA49, and taking the minimum value.	0-200×10ms	50
49	The working speed of the mechanical brake when the motor rotates	1. It defines the speed value from motor current cut-off to mechanical brake action (output terminal BRK from ON to OFF) during motor working. 2.The actual action time is the time it takes to drop from PA48 or current motor speed to PA49, and taking the minimum value.	0-3000 r/min	100
50	Speed limit in torque control mode	1:In torque control mode, the motor running speed is limited in the range of this parameter. 2:It can prevent over speed in light load.	0-5000 r/min	3000
53	Servo force enable	To set : 0: The enable signal is controlled by SON of digital input(DI). 1:Software force to servo on.	0-1	0
54	The delay closing time of servo enable	It defines the time to delay cutting off the motor current after the servo enable signal is turned off.	0-30000ms	0

<table>
<tr><th>No.</th><th>Name</th><th>Function</th><th>Rang</th><th>Default Value</th></tr>
<tr><td>55</td><td>Effective level control word of input terminals</td><td>1.To reverse the input terminals. For unreversed terminals, it is valid when the switch is closed, while it is invalid when the switch is open. For reversed terminals, it is invalid when the switch is closed, while it is valid when the switch is open.
2.Represented by a binary digit of 4 bits. If it is 0, it means the input terminal dose not reverse. While it is 1, it means the terminal reverses. The binary digit represents the input terminals as following:
<table>
<tr><th>3</th><th>2</th><th>1</th><th>0</th></tr>
<tr><td>DI4</td><td>DI3</td><td>DI2</td><td>DI1</td></tr>
</table>
0: high level is active.
1: low level is active.</td><td>0000-1111</td><td>0000</td></tr>
<tr><td>57</td><td>Effective level control word of output terminals</td><td>1.To reverse the output terminals. For reversed terminals,the definitions of breaking over and cut-off is contrary to standard definitions
2.Represented by a binary digit of 4 bits. If it is 0, it means the input terminal dose not reverse. While it is 1, it means the terminal reverses. The binary digit represents the input terminals as following:
<table>
<tr><th>3</th><th>2</th><th>1</th><th>0</th></tr>
<tr><td>DO4</td><td>DO3</td><td>DO2</td><td>DO1</td></tr>
</table>
0: high level is active.
1: low level is active.</td><td>0000-1111</td><td>0000</td></tr>
<tr><td>58</td><td>Removing jitter time constant of I/O input</td><td>1.Set the removing jitter filter time for input terminal.
2.The value is smaller, the terminal input response frequency is quicker.
3.The value is bigger, the anti-jamming</td><td>1-20ms</td><td>2</td></tr>
</table>

	terminal	performance of input terminal is better, but the response frequency becomes slow.		
59	Effective command pulse edge	Set to: 0: the rising edge is effective. 1:the falling edge is effective.	0-1	0
60	Soft reset	Set to: 0:Soft reset is invalid. 1:Soft reset is effective and the system will restart.	0-1	0
61	System alarm clear	Set to: 0: System alarm clear is invalid. 1: System alarm clear is effective.	0-1	0
62	Encoder selection	Set to: 4:single-turn absolute encoder. 5:multi-turn absolute encoder.	4-5	Decided by motor
63	Load inertia ratio	Set the load inertia ratio of the motor rotating inertia. The setting value=((load inertia+rotating inertia) / rotating inertia)×100.	1-500	100
64	Internal Torque 1	In torque control mode(PA4=2), when TRQ1=OFF, TRQ2=OFF, internal torque 1 is as the torque command.	-300-300	0
65	Internal Torque 2	In torque control mode(PA4=2), when TRQ1=ON, TRQ2=OFF, internal torque 2 is as the torque command.	-300-300	0
66	Internal Torque 3	In torque control mode(PA4=2), when TRQ1=OFF, TRQ2=ON, internal torque 3 is as the torque command.	-300-300	0
67	Internal Torque 4	In torque control mode(PA4=2), when TRQ1=ON, TRQ2=ON internal torque 4 is as the torque command.	-300-300	0
71	MODBUS ID NO.	MODBUS communication address.	1-254	1

No.	Name	Function	Rang	Default Value
72	MODBUS communication baud rate	MODBUS communication baud rate.	48-1152×100	96
73	MODBUS protocol selection	0: 8, N, 2 (MODBUS, RTU) 1：8，E，1 （MODBUS, RTU) 2：8，O，1 （MODBUS, RTU) The parameter decide the communication protocol. Value 8 represents the transmitted data is 8 bits; N,E,O indicate odd or even: N: do not use this bit. E: it represents 1 is even bit. O: it represents 1 is odd bit. Value 1 or 2 indicates communication of 1 bit or 2 bits.	0-3	0
74	Communication error handling	When communication happens error, if choose: 0: keep working. 1: alarm and stop working.	0-1	0
75	Zero-speed detection point	1. If the motor running speed is less than the value of this parameter, the ZSP(zero speed) of digital output(DO) is ON, or else OFF. 2. If ZCLAMP of digital input(DI) is ON and speed command is less than the value of this parameter, the value of speed command is forced to be zero.	0-1000 r/min	10
76	Speed coincidence range	When the difference between the actual speed and the instruction speed is less than this setting, the UCO2N(speed coincidence) is ON, otherwise OFF.	0-1000 r/min	10

77	2nd numerator of electronic gear for position command pulse	Refers to parameter PA12.	0-32767	0
78	3rd numerator of electronic gear for position command pulse	Refers to parameter PA12.	0-32767	0
79	4th numerator of electronic gear for position command pulse	Refers to parameter PA12.	0-32767	0
80	Effective level of command direction signal	Set to: 0:High level is positive direction. 1:Low level is positive direction.	0-1	0
81	PULS signal filter of command pulse	1.To filter the input PULS signal. 2.The default value is the max pulse input frequency: 500KHz(kpps). The value is bigger, the max input frequency is slower. 3.To filter the noise from the signal line in order to avoid incorrect counting happening. If it goes wrong due to the incorrect counting, you can increase the value of this parameter properly. 4. After editing this parameter, please save it and recharge. Then it is effective.	0-15	4
82	SIGN signal filter of command pulse	1.To filtering the input SIGN signal. 2.The default value is the max pulse input frequency: 500KHz(kpps) The value is bigger, the max input frequency is slower. 3.To filter the noise from the signal line in order to avoid incorrect counting happening. If it goes wrong due to the incorrect counting,	0-15	1

		you can increase the value of this parameter properly. 4. After edited this parameter, must save it and recharge. Then it is effective.		
83	CWL/CCWL inhibit way	When the machine touches the mechanical limit switch and strike CW/CCW limit , you can choose the following methods to prohibit with this parameters. 0: To limit the torque in this direction to be 0. 1: To prohibit the input pulse in this direction.	0-1	0
84	Hysteresis for positioning completion	1.Set pulse completion range in position control mode. 2. when the number of remaining pulses in the position deviation counter is less than or equal to the setting value of this parameter, the digital output of COIN(position completion) is ON, otherwise OFF. 3.Comparator has the function of hysteresis, which is set by PA85.	0-32767 pulses	65
85	The range of near position	1. To set the pulse range of near position under the position control mode. 2. When the pulse number in position deviation counter is smaller than or equal to the setting value of this parameter, the digital output (DO) NEAR(approach position) is ON, otherwise is OFF. 3. The comparator has hysteresis function set by PA86. 4. Use this function in case that in near positioning, the host controller is accepting the NEAR signal to carry on the preparation to the next step. In general, this parameter value should be bigger than PA16.	0-32767 pulses	6500

<table>
<tr><td>86</td><td>Hysteresis for approach positioning</td><td>Refer to parameter PA85.</td><td>0-32767 pulses</td><td>650</td></tr>
<tr><td>87</td><td>Hysteresis of arrival speed</td><td>1. When the motor speed exceeds this parameter, the digital output ASP (speed arrival) is ON, otherwise OFF.
2. The comparator has hysteresis function.
3. It has polarity setting function:
<table>
<tr><th>PA88</th><th>PA28</th><th>Comparator</th></tr>
<tr><td>0</td><td>>0</td><td>Speed without direction</td></tr>
<tr><td rowspan="2">1</td><td>>0</td><td>Only detect positive speed</td></tr>
<tr><td><0</td><td>Only detect reversal speed</td></tr>
</table></td><td>0-5000 r/min</td><td>30</td></tr>
<tr><td>88</td><td>Polarity of arrival speed</td><td>Refers to parameter PA87.</td><td>0-1</td><td>0</td></tr>
<tr><td>89</td><td>Arrival torque</td><td>1. When the motor torque exceeds this parameter, the digital output ATRQ (torque arrival) is ON, otherwise OFF.
2. The comparator has hysteresis function set by PA90.
3. It has polarity setting function:
<table>
<tr><th>PA91</th><th>PA89</th><th>Comparator</th></tr>
<tr><td>0</td><td>>0</td><td>Torque without direction</td></tr>
<tr><td rowspan="2">1</td><td>>0</td><td>Only detect positive speed</td></tr>
<tr><td><0</td><td>Only detect reversal speed</td></tr>
</table></td><td>-300%-300%</td><td>100</td></tr>
<tr><td>90</td><td>Hysteresis of arrival torque</td><td>1.If the motor torque is bigger than PA90, the ATRQ(torque arrival) of digital output(DO) is ON, otherwise it is OFF.
2.The comparator has hysteresis function set by PA90.
3.It also has polarity setting function:
<table>
<tr><th>PA91</th><th>PA89</th><th>Comparator</th></tr>
<tr><td>0</td><td>>0</td><td>Torque without direction</td></tr>
<tr><td rowspan="2">1</td><td>>0</td><td>Only detect positive speed</td></tr>
<tr><td><0</td><td>Only detect reversal speed</td></tr>
</table></td><td>0-300%</td><td>5</td></tr>
</table>

<table>
<tr><td>91</td><td>Polarity of arrival torque</td><td>1.If the motor torque is bigger than PA91, the ATRQ(torque arrival) of digital output(DO) is ON, otherwise it is OFF.
2.The comparator has hysteresis function and it is set by PA90.
3.It also has polarity setting function:
<table>
<tr><th>PA91</th><th>PA89</th><th>Comparator</th></tr>
<tr><td>0</td><td>>0</td><td>Torque without direction</td></tr>
<tr><td rowspan="2">1</td><td>>0</td><td>Only detect positive speed</td></tr>
<tr><td><0</td><td>Only detect reversal speed</td></tr>
</table></td><td>0-1</td><td>0</td></tr>
<tr><td>92</td><td>Hysteresis of zero speed detection</td><td>1. The motor speed is lower than the value of this parameter, ZSP(zero speed) of digital output is ON, or else OFF.
2. The comparator has hysteresis function.</td><td>0-1000 r/min</td><td>5</td></tr>
<tr><td>94</td><td>The delay time of brake on</td><td>This parameter defines the delay time from the servomotor energized until the action(the digital output(DO) BRK is ON .</td><td>0-200 ms</td><td>0</td></tr>
<tr><td>95</td><td>Motor encoder resolution</td><td>Motor encoder resolution，2^{17}=13107 and the setting value 17. Please modify it carefully.</td><td>10-32</td><td>17</td></tr>
<tr><td>96</td><td>Motor polarity</td><td>It is motor polarity. Please modify it carefully.</td><td>1-360</td><td>5</td></tr>
<tr><td>99</td><td>Maximum duty cycle on brake</td><td>Maximum duty cycle on brake</td><td>5-90</td><td>50</td></tr>
<tr><td>100</td><td>Filter selection of position loop</td><td>0：digital moving average filter.
1：index smooth filter.</td><td>0-1</td><td>0</td></tr>
<tr><td>101</td><td>Feed forward gain of position loop</td><td>Feed forward can reduce the position tracking error in position control. When set to 100, the position tracking error is always 0 under any frequency of instruction pulses.</td><td>0-100</td><td>0</td></tr>
<tr><td>102</td><td>Filter time constant of position loop feed forward</td><td>It is position loop feedforward filter to increase the stability of feedforward controlling.</td><td>20-500</td><td>100</td></tr>
</table>

103	Z Signal Output Pulse Width	Z Signal Output Pulse Width	1-200	50
104	RS Output Function Selection	To set: 0: It can use RS485 communication function. 1: No RS485 communication function, but it can add a programmable output port which can output differential signal(Z signal as default).	0-1	0

7.2 P3 Group Parameters For Multifunctional Terminals

7.2.1 Parameter Table

P series servo drives have 4 input terminals and 4 output terminals. The definition values can be set by P3 group parameters.(Low level is effective as default for input terminals).

Parameter	Name	Range	Default Value
P3-0	Digital Input DI1 Function	0-99	1
P3-1	Digital Input DI2 Function	0-99	2
P3-2	Digital Input DI3 Function	0-99	3
P3-3	Digital Input DI4 Function	0-99	4
P3-4	Digital Input DI5 Function	0-99	0
P3-5	Digital Input DI6 Function	0-99	0
P3-13	Low 8-bit current position value	-32768 - 32767	0
P3-14	High 8-bit current position value	-32768 - 32767	0
P3-15	Digital Input DI forced effective1	00000000-11111111	00000000
P3-16	Digital Input DI forced effective2	00000000-11111111	00000000
P3-17	Digital Input DI forced effective3	00000000-11111111	00000000
P3-18	Digital Input DI forced effective4	00000000-11111111	00000000
P3-19	Digital Input DI forced effective5	00000000-11111111	00000000
P3-20	Digital Output DO1 Function	0-99	2

P3-21	Digital Output DO2 Function	0-99	3
P3-22	Digital Output DO3 Function	0-99	5
P3-23	Digital Output DO4 Function	0-99	8
P3-24	Digital Output DO5 Function	0-99	18
P3-30	Virtual Input Terminal Control	0-2	0
P3-31	The State Value Of Virtual Input Terminal	00000000-11111111	00000000
P3-32	Virtual Output Terminal Control	0-1	0
P3-33	The State Value Of Virtual Output Terminal	0000-1111	0000
P3-38	Virtual I/O Input DI1 Function	0-99	0
P3-39	Virtual I/O Input DI2 Function	0-99	0
P3-40	Virtual I/O Input DI3 Function	0-99	0
P3-41	Virtual I/O Input DI4 Function	0-99	0
P3-42	Virtual I/O Input DI5 Function	0-99	0
P3-43	Virtual I/O Input DI6 Function	0-99	0
P3-44	Virtual I/O Input DI7 Function	0-99	0
P3-45	Virtual I/O Input DI8 Function	0-99	0

Remark:

1. P3-30=0, the number of IO input is 4 decided by DI1~DI4 and the corresponding parameter P3-0~P3-3.
2. P3-30=1, the number of IO input is 8 decided by P3-31 and the corresponding parameter P3-38~P3-45.
3. P3-30=2, the number of IO input is 12 decided by DI1~DI4 and P3-31 and the corresponding parameter P3-0~P3-3 and P3-38~P3-45.
4. For parameter P3-24, when PA104=1, this port can be set as differential output port.

7.2.2 DI Function Explanation

Input terminals(4 input terminals are corresponding to the definitions of P3-0,P3-1,P3-2,P3-3).

Value	Symbol	Function	Explanation
0	NULL	No	Input state dose not effect system.
1	SON	Servo Enable	Input terminal of servo enable. OFF: servo driver can not be enabled and serv omotor is not excited. ON:servo driver is enabled and servomotor is excited.
2	ARST	Alarm Clear	Input terminal of alarm clearance. When an alarm occurs and if the alarm is allowed clearance, the rising edge(from OFF becomes ON) of ARST will clear the alarm. Attention: only a part of alarms are allowed to clear.
3	CCWL	CCW Drive Inhibition	1.Input terminal of CCW drive inhibition: OFF：Inhibit CCW running. ON：Enable CCW running. 2.Use this function for protection of the mechanical traveling limit.The function is controlled by the parameter PA20. Pay attention to that the default value of PA20 neglects this function.Therefore needs to modify PA20 if need to use this function: (1)：When PA20=0，the function of input inhibition is effective. Whether to inhibit is decided by PA83. (2)：When PA20=1, the function of input inhibition is not effective. Whether to inhibit is not decided by PA83 3. Inhibition function is valid(PA20=0): (1) PA83=0, CCW torque limit is 0,but it does not limit CCW pulse input. **(2)** PA83=1, it does not inhibit CCW pulse input.
4	CWL	CW Drive Inhibition	1.The input terminal of CW drive inhibition OFF：Inhibit CCW running. ON：Enable CW running.

			2.Use this function for protection of the mechanical traveling limit.The function is controlled by the parameter PA20. Pay attention to that the default value of PA20 neglects this function.Therefore needs to modify PA20 if need to use this function: (1)：When PA20=0，the function of input inhibition is effective. Whether to inhibit for CW is decided by PA83. (2)：When PA20=1, the function of input inhibition is not effective. Whether to inhibit for CW is not decided by PA83 3.Inhibition function is valid(PA20=0): (1)：PA83=0, CW torque limit is 0,but it does not limit CW pulse input. PA83=1, it does not inhibit CW pulse input.
5	TCCW	CCW Torque Limitation	OFF： Torque is not limited by parameter PA36 in CCW direction. ON ： Torque is limited by parameter PA36 in CCW direction. Attention: Whether the TCCW is effective or not, the torque is also limited by PA34 in CCW direction.
6	TCW	CW Torque Limitation	OFF：Torque is not limited by parameter PA37 in CW direction. ON ： Torque is limited by parameter PA37 in CW direction. Attention: Whether the TCW is effective or not, the torque is also limited by PA35 in CW direction.
7	ZCLAMP	Zero Speed Clamping	When it is satisfied with the followings, the function of zero speed clamping is open(speed is forced to zero): 1: speed control mode(PA4=1), and choose external speed(PA22=0); 2：ZCLAMP ON;

			3：speed command is lower than the value of PA75 When any one of the above conditions is not satisfied, it will perform normal speed control.
8	CZERO	Zero Command	In speed or torque control mode, speed or torque command: OFF：Normal command ON::：Zero command
9	CINV	Instruction Reverse	In speed or torque control mode, speed or torque command: OFF：Normal command ON：Command reversed
10	SP1	Speed Choice 1	In speed control mode(PA4=1), and choose internal speed(PA22=1). SP1 and SP2 combinations are used to select different internal speeds: SP2 OFF SP1 OFF: internal speed 1PA-24) SP2 OFF SP1 ON: internal speed 2(PA-25) SP2 ON SP1 OFF:internal speed 3(PA-26) SP2 ON SP1 ON:internal speed 4(PA-27)
11	SP2	Speed Choice 2	
13	TRQ1	Torque Choice 1	In torque control mode(PA4=2), and choose internal torque(PA32=1). TRQ1 and TRQ2 combinations are used to select different internal torque: TRQ2 OFF TRQ1 OFF: internal torque1(PA64) TRQ2 OFF TRQ1 ON: internal torque2(PA65) TRQ2 ON TRQ1 OFF: internal torque3(PA66) TRQ2 ON TRQ1 ON: internal torque4(PA67)
14	TRQ2	Torque Choice 2	
16	CMODE	Composite Mode	When PA4 is set to 3, 4, 5, it is in mix control mode. It can change control mode with this input terminal: (1)PA4=3, CMODE OFF, it is position control mode; CMODE ON, it is speed control mode; (2)PA4=4, CMODE OFF, it is position control mode; CMODE ON, it is torque control mode; (3)PA4=5, CMODE OFF, it is speed control mode; CMODE ON, it is torque control mode.

18	GEAR1	Electronic Gear 1	When PA11=0, Gear1 and Gear2 combinations are used to select different numerator of gear ratio: GEAR2 OFF GEAR1 OFF: numerator 1(PA-12) GEAR2 OFF GEAR1 ON: numerator 2 (PA-77) GEAR2 ON GEAR1 OFF: numerator 3(PA-78) GEAR2 ON GEAR1 ON: numerator 4(PA-79)
19	GEAR2	Electronic Gear 2	
20	CLR	Position Deviation Clear	In position control mode, the position deviation counter clear input terminals.
21	INH	Pulse Input Inhibition	In position control mode, position command pulse inhibit terminals: OFF: The input command pulse is valid. ON : The input command pulse input is prohibited.
22	JOGP	CCW Inching	In speed control mode, PA22=5, connect to the signal, the motor is in inching in CCW and speed is set by PA21. Attention: If the signal is connected to CW inching, inching function does not work.
23	JOGN	CW Inching	In speed control mode, PA22=5, connect to the signal, the motor is in inching in CW and speed is set by PA21. Attention: If the signal is connected to CCW inching, inching function does not work.
27	HOLD	Internal Position Control Command Stops	In internal position register mode, the motor will stop rotating if the signal is active(It can only work when internal position mode PA-14=3).
28	CTRG	Internal Position Command Triggers	In internal position register mode, the signal will be triggered once the internal position register control commands(POS0-2) are chosen, and then the motor will rotate according to the internal position register command. Only when ZSPD=1(digital output) it would receive a next internal position command trigger.

<table>
<tr><td>29</td><td>POS0</td><td>Internal Position Command Selection0</td><td rowspan="3">The corresponding relationship of the internal position selection:
<table>
<tr><th>Position Command</th><th>POS2</th><th>POS1</th><th>POS0</th><th>CTRG</th><th>Parameter</th></tr>
<tr><td rowspan="2">P1</td><td rowspan="2">0</td><td rowspan="2">0</td><td rowspan="2">0</td><td rowspan="2">↑</td><td>P4-2</td></tr>
<tr><td>P4-3</td></tr>
<tr><td rowspan="2">P2</td><td rowspan="2">0</td><td rowspan="2">0</td><td rowspan="2">1</td><td rowspan="2">↑</td><td>P4-5</td></tr>
<tr><td>P4-6</td></tr>
<tr><td rowspan="2">P3</td><td rowspan="2">0</td><td rowspan="2">1</td><td rowspan="2">0</td><td rowspan="2">↑</td><td>P4-8</td></tr>
<tr><td>P4-9</td></tr>
<tr><td rowspan="2">P4</td><td rowspan="2">0</td><td rowspan="2">1</td><td rowspan="2">1</td><td rowspan="2">↑</td><td>P4-11</td></tr>
<tr><td>P4-12</td></tr>
<tr><td rowspan="2">P5</td><td rowspan="2">1</td><td rowspan="2">0</td><td rowspan="2">0</td><td rowspan="2">↑</td><td>P4-14</td></tr>
<tr><td>P4-15</td></tr>
<tr><td rowspan="2">P6</td><td rowspan="2">1</td><td rowspan="2">0</td><td rowspan="2">1</td><td rowspan="2">↑</td><td>P4-17</td></tr>
<tr><td>P4-18</td></tr>
<tr><td rowspan="2">P7</td><td rowspan="2">1</td><td rowspan="2">1</td><td rowspan="2">0</td><td rowspan="2">↑</td><td>P4-20</td></tr>
<tr><td>P4-21</td></tr>
<tr><td rowspan="2">P8</td><td rowspan="2">1</td><td rowspan="2">1</td><td rowspan="2">1</td><td rowspan="2">↑</td><td>P4-23</td></tr>
<tr><td>P4-24</td></tr>
</table></td></tr>
<tr><td>30</td><td>POS1</td><td>Internal Position Command Selection1</td></tr>
<tr><td>31</td><td>POS2</td><td>Internal Position Command Selection2</td></tr>
<tr><td>33</td><td>SHOM</td><td>Starting Origin Regression</td><td>In internal position register mode,it needs to search for origin. The signal turns on and starts searching for the origin function(Refer to the setting of P4-34).</td></tr>
<tr><td>34</td><td>ORGP</td><td>Origin Of Regression</td><td>In internal position register mode,it needs to search for origin. The signal turns on and starts searching for the origin function(Refer to the setting of P4-32).</td></tr>
</table>

7.2.3 DO Function Explanation

Output terminals(4 input terminals are corresponding to the definitions of P3-20,P3-21,P3-22,P3-23).

Value	Symbol	Function	Explanation
1	ON	Always Valid	Forced output ON.
2	RDY	Servo Ready	OFF ：Main power supply is off, or alarm occurs; ON：Main power supply is normal, no alarm occurs
3	ALM	Alarm	OFF ：alarm occurs. ON ：no alarm occurs.
4	ZSP	Zero Speed	In speed or torque control mode: OFF：motor speed is higher than the value of PA75 (no direction). ON：motor speed is higher than the value of PA75 (no direction).
5	COIN	Positioning Completion	In position control mode: OFF:position deviation is bigger than parameter PA16. ON: position deviation is bigger than parameterPA16.
6	ASP	Arrival Speed	In speed or torque control mode: OFF :motor speed is lower than parameter PA28. ON : motor speed is higher than parameterPA28. Polarity function can be set referring to the explanation of PA28.
7	ATRQ	Arrival Torque	OFF : motor torque is lower than parameter PA89; ON : motor torque is higher than parameter PA89. Polarity function can be set referring to the explanation of PA89.
8	BRK	Electromagnetic Brake	OFF : electromagnetic brake applies the brake. ON : electromagnetic brake releases the brake.
9	RUN	Servo Running	OFF : servo motor does not excite. ON : servo motor has excited.
10	NEAR	Near Position	In position control mode: OFF: position deviation is bigger than parameter PA85. ON: position deviation is smaller than parameter PA85.

11	TRQL	Torque Limitation	OFF : motor torque has not reached the limitation. ON : motor torque has reached the limitation. Torque limitation is set byPA34,PA35,PA36 and PA37.
12	SPL	Speed Limitation	In torque control mode: OFF : motor speed has not reached the limitation. ON : motor speed has reached the limitation. Speed limitation is set byPA50.
13	VCOIN	Speed Consistency	OFF: The absolute value of the difference between the actual rotational speed and the instruction speed is bigger than PA76. ON: The absolute value of the difference between the actual rotational speed and the instruction speed is smaller than PA76.
15	HOME	Origin Regression Completion	OFF: No signal output when the origin regression doesn’t complete. ON: The signal outputs when the origin regression completes.
16	CMDOK	Internal Position Command Completion	OFF: No signal output when internal position command doesn’t complete or internal position command doesn’t stop. ON: The signal outputs after the setting time of P4-1 when internal position command completes or internal position command stops.
18	ZOUT	Z Signal Output	OFF: Do not output signal when Z signal is invalid. ON : Signal outputs when Z signal is valid.

7.2.4 DI Forced Valid

There are 5 parameters(P3-15, P3-16, P3-17,P3-18,P3-19) in group P3 and they can force DI valid.

(1) Corresponding functions for P3-15 is represented by 8-bit binary:

Number	Bit7	Bit6	Bit5	Bit4	Bit3	Bit2	Bit1	Bit0
Function	CZERO	ZCLAMP	TCW	TCCW	CWL	CCWL	ARST	SON

(2) Corresponding functions for P3-16 is represented by 8-bit binary:

Number	Bit7	Bit6	Bit5	Bit4	Bit3	Bit2	Bit1	Bit0
Function	CMODE	NULL	TRQ2	TRQ1	NULL	SP2	SP1	CINV

(3) Corresponding functions for P3-17 is represented by 8-bit binary:

Number	Bit7	Bit6	Bit5	Bit4	Bit3	Bit2	Bit1	Bit0
Function	NULL	JOGN	JOGP	INH	CLR	GEAR2	GEAR1	NULL

(4) Corresponding functions for P3-18 is represented by 8-bit binary:

Number	Bit7	Bit6	Bit5	Bit4	Bit3	Bit2	Bit1	Bit0
Function	NULL	POS2	POS1	POS0	CTRG	HOLD	NULL	NULL

(5) Corresponding functions for P3-19 is represented by 8-bit binary:

Number	Bit7	Bit6	Bit5	Bit4	Bit3	Bit2	Bit1	Bit0
Function	NULL	NULL	NULL	NULL	NULL	NULL	ORGP	SHOM

Parameter Meaning:

One of 5 parameters	Corresponding Function	Result
0	Unplanned	OFF（invalid）
	Already Planned	It is up to signals
1	Unplanned Or Already Planned	ON（forced valid）

NOTE

◆ Being planned means that the parameter has been selected by the input terminal in the P3-0~P3-3.

7.3 P4 Group Parameters For Internal Position Command

No.	Name	Function	Rang	Default Value
P4-0	Internal position instruction control mode	0: absolute position instruction. 1: incremental position instruction.	0-1	0
P4-1	The digital output delay of internal position completion	1. When the internal position command is completed or stops,the output internal position command completes (CMDOK) this DO signal after the delay time set by P4-1. 2. Only when the delay time P4-1=0 and CMDOK=1 can it receive trigger internal position command. 3. Only when the delay time P4=1 is not 0 and CMDOK=1 can it receive the internal position command triggered by CTRG.	0-200 ms	0
P4-2	The setting of position cycle numbers for internal position command 1	To set position cycles of the first internal position.	-30000-30000	0
P4-3	The setting of pulse number in position cycle for internal position command 1	1. To set position pulses of the first internal position. 2. Internal position command=the setting value of the first internal position cycles+the setting value of the first internal position pulses. (Max is the pulse number of the motor rotation for each roll, please refer to the settings of PA11,PA12 and PA13).	+/-max. cnt/rev	0

P4-4	The move speed of Internal position instruction 1	To set the move speed of internal position instruction 1.	0-5000 r/min	1000
P4-5	The number of position cycles of internal position instruction 2	To set the number of position cycles of the second stage internal position.	-30000-30000	0
P4-6	The pulse number setting in position loop of internal position instruction 2	1. To set the position pulses of the second stage internal position. 2. Internal position instruction 2=the position cycles setting of the second internal position+the pulse number setting of the second internal position.	+/-max. cnt/rev	0
P4-7	The move speed of internal position instruction 2	To set the move speed of internal position instruction 2.	0-5000 r/min	1000
P4-8	The position cycles of internal position instruction 3	To set the position cycles of the third stage internal position instruction.	-30000-30000	0
P4-9	The pulse number setting in position loop of internal position instruction 3	1. To set the position pulses of the third stage internal position. 2. Internal position instruction 3=the position cycles setting of the third internal position+the pulse number setting of the third internal position.	+/-max. cnt/rev	0

P4-10	The move speed of internal position instruction 3	To set the move speed of internal position instruction 3.	0-5000 r/min	1000
P4-11	The number of position cycles of internal position instruction 4	To set the number of position cycles of the fourth stage internal position.	-30000-30000	0
P4-12	The pulse number setting in position loop of internal position instruction 4	1. To set the position pulses of the 4th stage internal position. 2. Internal position instruction 4=the position cycles setting of the 4th internal position+the pulse number setting of the 4th internal position.	+/-max. cnt/rev	0
P4-13	The move speed of internal position instruction 4	To set the move speed of internal position instruction 4.	0-5000 r/min	1000
P4-14	The position cycles of internal position instruction 5	To set the position cycles of the 5th stage internal position instruction.	-30000-30000	0
P4-15	The pulse number setting in position loop of internal position instruction 5	1. To set the position pulses of the 5th stage internal position. 2. Internal position instruction 3=the position cycles setting of the 5th internal position+the pulse number setting of the third internal position.	+/-max. cnt/rev	0

P4-16	The move speed of internal position instruction 5	To set the move speed of internal position instruction 5.	0-5000 r/min	1000
P4-17	The number of position cycles of internal position instruction 6	To set the number of position cycles of the sixth stage internal position.	-30000-30000	0
P4-18	The pulse number setting in position loop of internal position instruction 6	1. To set the position pulses of the 6th stage internal position. 2. Internal position instruction 6=the position cycles setting of the 6th internal position+the pulse number setting of the 6th internal position.	+/-max. cnt/rev	0
P4-19	The position cycles of internal position instruction 7	To set the position cycles of the 7th stage internal position instruction.	0-5000 r/min	1000
P4-20	The position cycles of internal position instruction 7	To set the position cycles of the 7th stage internal position instruction.	-30000-30000	0
P4-21	The pulse number setting in position loop of internal position instruction 7	1. To set the position pulses of the 7th stage internal position. 2. Internal position instruction 7=the position cycles setting of the 7th internal position+the pulse number setting of the 7th internal position.	+/-max. cnt/rev	0

P4-22	The move speed of internal position instruction 7	To set the move speed of internal position instruction 7.	0-5000 r/min	1000
P4-23	The number of position cycles of internal position instruction 8	To set the number of position cycles of the eighth stage internal position.	-30000-30000	0
P4-24	The pulse number setting in position loop of internal position instruction 8	1. To set the position pulses of the 8th stage internal position. 2. Internal position instruction 8=the position cycles setting of the 8th internal position+the pulse number setting of the 8th internal position.	+/-max. cnt/rev	0
P4-25	The move speed of internal position instruction 8	To set the move speed of internal position instruction 8.	0-5000 r/min	1000
P4-32	The type of origin detector and setting of finding direction	0: Forward direction origin regression and CCWL is as regression origin. 1: Reverse direction origin regression and CWL is as regression origin. 2: Forward direction origin regression and ORGP is as regression origin. 3: Reverse direction origin regression and ORGP is as regression origin. 4: Forward looking for Z pulse as the origin of regression. 5: Reverse looking for Z pulse as the origin of regression.	0-5	0

P4-33	Set the mode of short distance movement to the origin	0: Find the reference origin and return to search for the Z phase pulse as the mechanical origin. 1: Find the reference origin and keep forward for the Z phase pulse as the mechanical origin. 2: Find the rising edge of the detector ORGP as the mechanical origin. (when it is 2, only the type of origin detector and the setting value of the search direction can be used as 2, 3,4 or 5.)	0-2	0
P4-34	Origin trigger start mode	0: Close origin regression function. 1: Automatically perform origin regression when it is powering on. 2: Trigger the origin regression function by the input contact of the origin search function.	0-2	0
P4-35	The setting of origin stop mode	0: The motor slows down and pulls back to the origin when the origin detection completed. 1: The motor slows forward and stops when the origin detection completed.	0-1	0
P4-36	The speed setting of origin regress in the first stage of high speed (HSPD1)	To set homing speed at 1st stage. 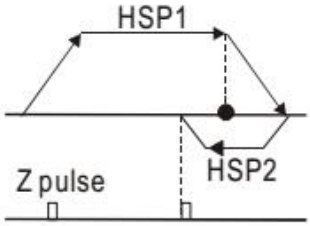 	1-2000 r/min	1000
P4-37	The speed setting of origin regress in the first stage of high speed(HSPD2)	To set the speed of origin regression in the second stage of high speed.	1-500 r/min	50

P4-38	The cycle number of origin regression offset(HOF1)	To set the cycle number of origin regression offset.	-30000-30000	0
P4-39	The pulse number of origin regression offset(HOF2)	1: To set the pulse number of origin regression offset. 2: When the parameter function HOF1 and HOF2 are set to 0, the origin is defined as Z pulse or ORGP by the origin regression mode. If they are not 0, the origin will define the above Z pulse plus last pulse offset HOF1 × 10000+HOF2 as the new origin.	+/-max. cnt/rev	0

Chapter 8 Error Code

No.	Error Name	Introduction
--	Normal	
1	Over speed	Motor speed over than the setting values.
2	Main circuit over voltage	The voltage of main circuit is too high
3	Main circuit under voltage	The voltage of main circuit is too low
4	Position overshoot	The value of position deviation counter is over than the setting value.
5	Drive overheat	The temperature of the drive is high
6	Speed amplifier saturation fault	Speed adjustment for long time saturation
7	Drive inhibit error	Speed adjustment in saturation for long time
8	Position deviation accumulation was out of range	Absolute value of position deviation accumulation is over than 2^{30}.
11	IPM module error	IPM smart module error
13	Drive overload	Servo drive and motor overload(overheat instantaneously)
14	Braking trouble	Brake circuit Error
18	Relay switch fault	The real state of relay is different from control state
19	Error occurred when delay to open the brake	Pulse inputs before opening
20	EEPROM error	EEPROM error
21	FPGA module fault	FPGA module fault
23	Current collecting circuit fault	Current collecting circuit fault
29	Alarm for torque overload	Motor load exceeds user-set values and range
38	Failure to read or write encoder EEPROM communication	The encoder cable was not connected Or the encoder interface circuit fault.
39	Data CRC checking error	The motor encoder hasn't written dataes and all are 0.
40	Model not supported	Driver does not support this motor model
41	Need to switch motor model	The current motor is inconsistent with the selected model of the drive.
42	AC input under voltage	AC input under voltage
47	Over voltage when main circuit	Over voltage when main circuit in powering up

	in powering up	
50	Encoder communication fault	Driver and encoder are not connected
51	Encoder communication abnormal	After the encoder established the communication, there appears the interrupt and disconnection.
52	Encoder battery voltage insufficient alarm	Encoder battery voltage insufficient alarm, but information did not lost and needs to be replaced as soon as possible.
53	Encoder battery voltage error alarm	Encoder battery voltage error alarm, and storage information has occurred error needing to reset encoder.
54	Encoder error alarm	Encoder non-battery alarm, but need to reset encoder again.
55	CRC check occurs errors for 3 times in a row	Encoder communication received data CRC validation 3 consecutive errors.
56	MODBUS frame is too long	MODBUS frame data received is too long
57	Abnormal MODBUS communication format	Improper setting of communication parameters or incorrect address or value
58	Single turn position error	Single turn position offset stored by the drive exceeds encoder resolution
59	Encoder reporting CF error	Encoder continuously reports CF domain error and is needed reset encoder

Small Size, High Precision